DATE	NO. SETS	
	RECORD PLANS	
	CONSTRUCTION PLANS	

REVIEWED BY _____ DIVISION OF CONSTRUCTION

COUNTY OF	ITEM NO.	SHEET NO.
CALLOWAY	1-314.10	R1

REVISED PLANS DATE: APRIL 17, 2018

COMMONWEALTH OF KENTUCKY
DEPARTMENT OF HIGHWAYS

PLANS OF PROPOSED PROJECT US 641 WIDENING
CALLOWAY COUNTY
RIGHT OF WAY PLANS
FD04 018 0641 000–007

INDEX OF SHEETS

SHEET NO.	DESCRIPTION
R1	LAYOUT SHEET
R1A	RIGHT OF WAY REVISION SHEET
R2-R2G	TYPICAL SECTIONS
R3-R41	PLAN AND PROFILE SHEETS
R42	RIGHT OF WAY SUMMARY SHEETS
R43-R44	RIGHT OF WAY STRIP MAP SHEETS
R45	REFERENCE SHEET
R46-R48	GEOMETRY AND TRAVERSE LAYOUTS

(R) ROADWAY
(S) STRUCTURE
(T) TRAFFIC
(U) UTILITY
(X) CROSS SECTION

SHEETS NOT INCLUDED IN TOTAL SHEETS
R1A, R2A, R2B, R2C, R2D, R2E, R2F, R2G

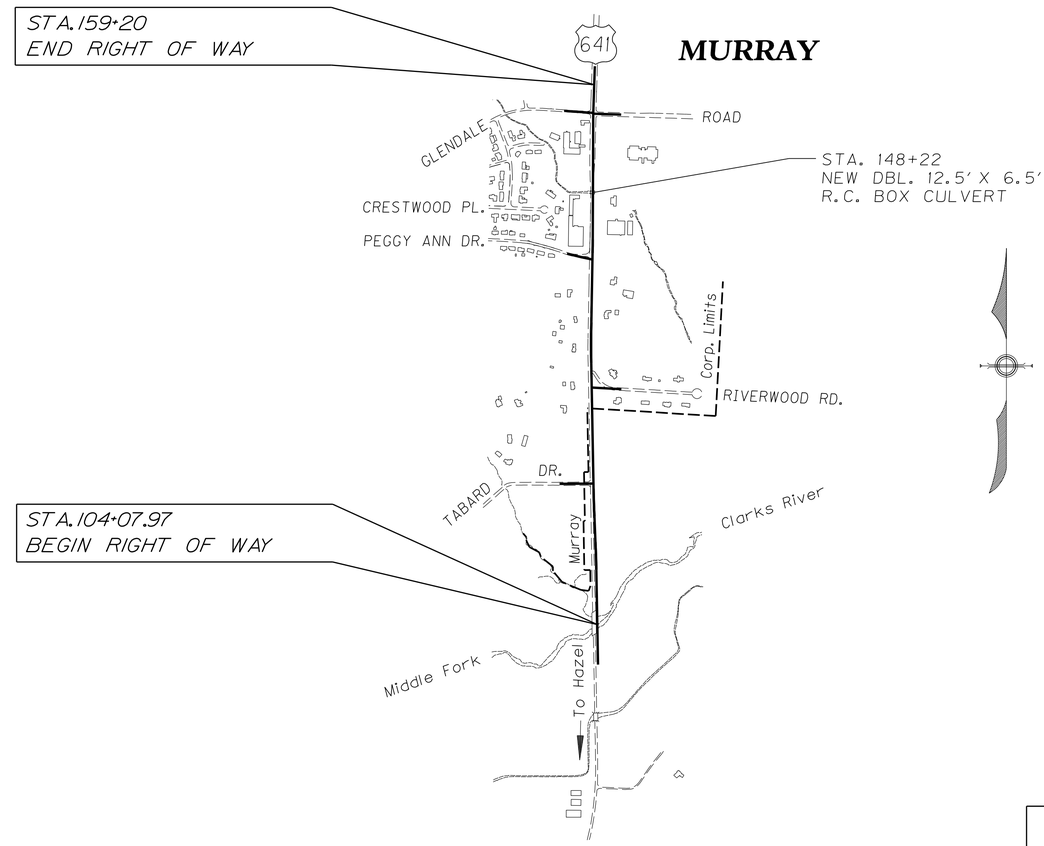

0 .025 0.5
GRAPHIC SCALE IN MILES

LAYOUT MAP

RIGHT OF WAY PLANS

THE CONTROL OF ACCESS ON THIS PROJECT SHALL BE BY PERMIT.

NATIONAL HIGHWAY SYSTEM

DESIGN CRITERIA

CLASS OF HIGHWAY	URBAN PRINCIPAL ARTERIAL
TYPE OF TERRAIN	ROLLING
DESIGN SPEED	45 mph
REQUIRED SSD	360
REQUIRED PSD	1625
LEVEL OF SERVICE	B
ADT PRESENT (2001)	8700
ADT FUTURE (2027)	12,800
DHV	1330
D %	
T %	16.2%

GEOGRAPHIC COORDINATES

LATITUDE 36 DEGREES 35 MINUTES NORTH
LONGITUDE 88 DEGREES 18 MINUTES WEST

DESIGNED

% RESTRICTED SD	0
LEVEL OF SERVICE	B
MAX. DISTANCE W/O PASSING	0

	Calloway Co.	City of Murray	Total Project	
LENGTH	2206.21 LIN. FT. 0.41 MILES	3305.82 LIN. FT. 0.62 MILES	5512.03 LIN. FT. 1.04 MILES	LIN. FT. MILES
ADDED / DEDUCTED FOR EQUALITIES	0.00 LIN. FT.	0.00 LIN. FT.	0.00 LIN. FT.	LIN. FT.
NOT INCLUDED				
RAILROAD CROSSINGS NO.	0.00 LIN. FT.	0.00 LIN. FT.	0.00 LIN. FT.	LIN. FT.
BRIDGES	LIN. FT.	LIN. FT.	LIN. FT.	LIN. FT.

KENTUCKY DEPARTMENT OF HIGHWAYS
COUNTY OF CALLOWAY

WIDENING OF US 641 FROM THE MIDDLE FORK OF THE CLARKS RIVER TO 0.05 MILES NORTH OF THE GLENDALE ROAD INTERSECTION.

ITEM NO. 1-314.10
PROJECT NUMBER: FD04 018 0641 000-007
LETTING DATE: _____

RECOMMENDED BY _____ PROJECT MANAGER DATE
PLAN APPROVED BY _____ STATE HIGHWAY ENGINEER DATE

HDR

Cell Library: kytc.cel
Cell Name: si
DD-MMM-YYYY HH:MM

COUNTY OF	ITEM NO.	SHEET NO.
CALLOWAY	1-314.10	R1A

REVISED PLANS DATE: SEPTEMBER 13, 2018

RIGHT OF WAY REVISION NO. 1

REVISED PLANS DATE: AUGUST 18, 2015

SHEETS REVISED: R1, R1A, R16, R18, R19, R21, R22, R27, R28, R30, R31, R33, R34, R41, R42, R43 & R44

PARCELS INVOLVED: P#11, P#13, P#15, P#29, P#30 P#31, P#32, P#33 & P#34

REMARKS:
ADDED SHEET NUMBER R1A TO INDEX OF SHEETS ON SHEET R1
ADDED SHEET R1A TO THE PLANS
ADDED AND/OR REVISED SOURCE OF TITLE INFO ON PARCELS 11,13,15,30,31,32,33 & 34
REVISED PROPERTY OWNER NAME ON PARCELS 13,15,29,30,31,32,33 & 34

RIGHT OF WAY REVISION NO. 2

REVISED PLANS DATE: OCTOBER 12, 2015

SHEETS REVISED: R1A, R19, R33, R34, R41, R42 & R44

PARCELS INVOLVED: P#10, P#15, P#27, P#33, P#34

REMARKS:

REVISED BEARING IN PARCEL 10 TRACT DESCRIPTION.

REVISED ARC LENGTH IN PLANS ON PARCEL 15.

REVISED BEARING IN PARCEL 27 TRACT DESCRIPTION.

REVISED DISTANCE IN PLANS AND TRACT DESCRIPTION ON PARCEL 33.

REVISED TEMPORARY AND PERMANENT EASEMENTS ON PARCEL 34.

RIGHT OF WAY REVISION NO. 3

REVISED PLANS DATE: NOVEMBER 18, 2016

SHEETS REVISED: R1A, R18, R21 & R24

PARCELS INVOLVED: P#13, P#15 & P#19

REMARKS:

ADDED ENTRANCES LT. STA. 131+00, LT. STA. 134+25 AND LT. STA. 137+00 FOR PARCEL 13.

ADDED ENTRANCES RT. STA. 131+20 AND RT. 133+90 FOR PARCEL 15.

ADDED ENTRANCE LT. STA. 140+40 FOR PARCEL 19.

RIGHT OF WAY REVISION NO. 4

REVISED PLANS DATE: JANUARY 4, 2017

SHEETS REVISED: R1A, R9, R10, R11, R12, R13, R14, R36, R42, R43, R45

PARCELS INVOLVED: P#4

REMARKS:

ADDED ENTRANCE AND TEMPORARY EASEMENT RT. STA. 118+48 AND REVISED ENTRANCE AND TEMPORARY EASEMENT RT. STA. 123+88 FOR PARCEL 4. REVISED RIGHT-OF-WAY MONUMENT TYPE 100' RT. STA. 123+80.

RIGHT OF WAY REVISION NO. 5

REVISED PLANS DATE: FEBRUARY 6, 2017

SHEETS REVISED: R1A, R24, R25, R28, R38, R40, R42, R44

PARCELS INVOLVED: P#25 & P#27

REMARKS:

ADDED PROPERTY LINE TO PARCEL 27 AND CREATED A NEW PARCEL #25 FOR THE TAYLOR & TAYLOR, INC. PROPERTY. REVISED ENTRANCE AND TEMPORARY EASEMENT ON PARCEL 27.

RIGHT OF WAY REVISION NO. 6

REVISED PLANS DATE: MAY 15, 2017

SHEETS REVISED: R1A, R22, R24, R25, R38, R40, R42, R44, R45

PARCELS INVOLVED: P#17

REMARKS:

REVISED TOTAL AREA OF PARCEL 17 TO INCLUDE HALF OF THE EXISTING R/W (25') FOR FUTURE CITY STREET.

REVISED PROPOSED R/W ON PARCEL 17 TO INCLUDE WHAT WAS PREVIOUSLY SHOWN AS EXISTING R/W.

REVISED SOURCE OF TITLE & TOTAL AREA ACREAGE FOR PARCEL 17.

RIGHT OF WAY REVISION NO. 7

REVISED PLANS DATE: SEPTEMBER 8, 2017

SHEETS REVISED: R1A, R24, R25, R27, R28, R42, R44

PARCELS INVOLVED: P#27

REMARKS:

MOVED ENTRANCE FROM RT. STA. 143+70 TO RT. STA. 146+00 ON PARCEL 27.

REVISED ASSOCIATED PERMANENT & TEMPORARY EASEMENTS FOR PARCEL 27.

RIGHT OF WAY REVISION NO. 8

REVISED PLANS DATE: APRIL 17, 2018

SHEETS REVISED: R1, R1A, R2D, R24, R25, R38, R39, R40, R42, R44, R45

PARCELS INVOLVED: P#17

REMARKS:

DELETED PROPOSED FUTURE CITY STREET FROM THE PLANS.

ADDED PROPOSED ENTRANCE RT. STA. 141+25.

REVISED PROPOSED R/W AND TEMPORARY EASEMENTS ON PARCEL 17.

RIGHT OF WAY REVISION NO. 9

REVISED PLANS DATE: SEPTEMBER 13, 2018

SHEETS REVISED: R1A, R42, R44

PARCELS INVOLVED: P#29

REMARKS:

REVISED TOTAL AREA OF TRACT ON PARCEL 29 TO INCLUDE BOTH TRACTS CONTAINED IN THE SOURCE DEED.

REVISED PORTION REMAINING ON PARCEL 29.

RIGHT OF WAY PLANS

SCALE: N/A

RIGHT OF WAY REVSION SHEET

MicroStation v8.11.9.832 E-SHEET NAME: USER: WIWRIGHT DATE PLOTTED: September 14, 2018 FILE NAME: H:\01037 US641 CALLOWAY\11-09_LEXINGTON\01037\ROW PLANS 9-7-07\R1A RW REVISION SHEET.DGN

COUNTY OF	ITEM NO.	SHEET NO.
CALLOWAY	I-314.10	R2

TYPICAL SECTIONS

NOT TO SCALE

1. SEE CROSS SECTIONS FOR SLOPES OUTSIDE THE LIMITS OF THE SHOULDERS
2. ASPHALT SEAL REQUIRED FROM OUTSIDE EDGE OF PAVED SHOULDER TO A POINT 2' DOWN THE DITCH OR FILL SLOPE. TWO APPLICATIONS OF THE FOLLOWING: EMULSIFIED ASPHALT RS-2 @ 2.40 LBS./SQ.YD. ASPHALT SEAL AGGREGATE @ 20 LBS./SQ.YD. (SIZE NO. 8 OR 9 m)
3. SHOULDER SHALL BE WIDENED 3' WHERE GUARDRAIL IS REQUIRED AND PAVED TO THE FACE OF THE RAIL.

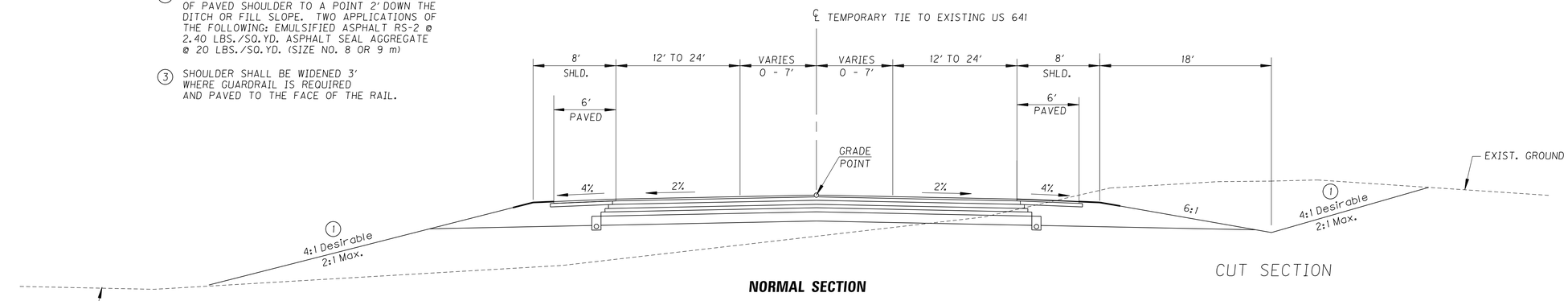

NORMAL SECTION

TEMPORARY TIE TO EXISTING US 641
10+00 TO 20+97.36

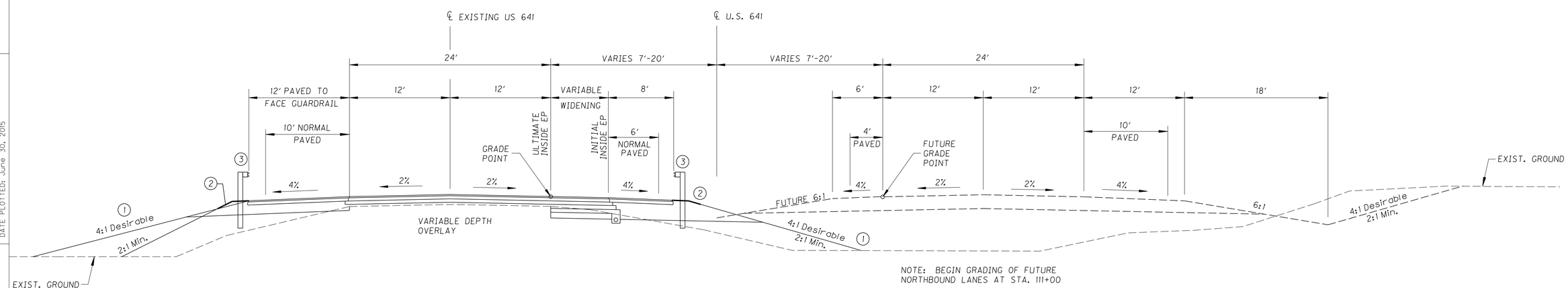

NORMAL SECTION

US 641
STA. 105+25 TO STA. 113+50

RIGHT OF WAY PLANS

SCALE: 1"=

US 641 TYPICAL SECTIONS

FILE NAME: H:\01037 US641 CALLOWAY\I-09_LEXINGTON\01037\ROW PLANS 9-7-07\R2 TYPRW.DGN
USER: ekenan
DATE PLOTTED: June 30, 2015
E-SHEET NAME:
MicroStation v8.11.7.529

COUNTY OF	ITEM NO.	SHEET NO.
CALLOWAY	I-314.10	R2A

TYPICAL SECTIONS

NOT TO SCALE

1. SEE CROSS SECTIONS FOR SLOPES OUTSIDE THE LIMITS OF THE SHOULDERS
2. ASPHALT SEAL REQUIRED FROM OUTSIDE EDGE OF PAVED SHOULDER TO A POINT 2' DOWN THE DITCH OR FILL SLOPE. TWO APPLICATIONS OF THE FOLLOWING: EMULSIFIED ASPHALT RS-2 @ 2.40 LBS./SQ.YD. ASPHALT SEAL AGGREGATE @ 20 LBS./SQ.YD. (SIZE NO. 8 OR 9 m)
3. SEE CROSS SECTIONS FOR CROSS SLOPE TRANSITION

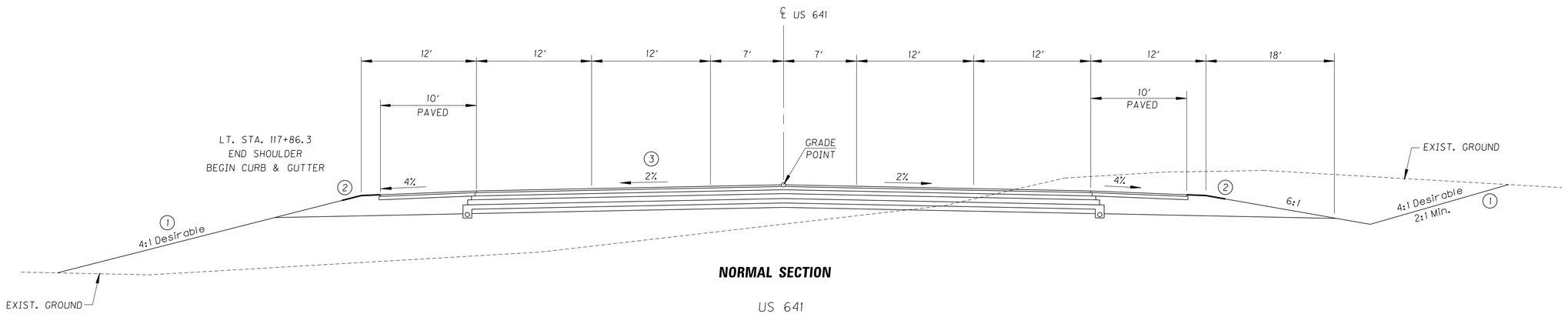

NORMAL SECTION

US 641
STA. 117+00 TO STA. 118+74

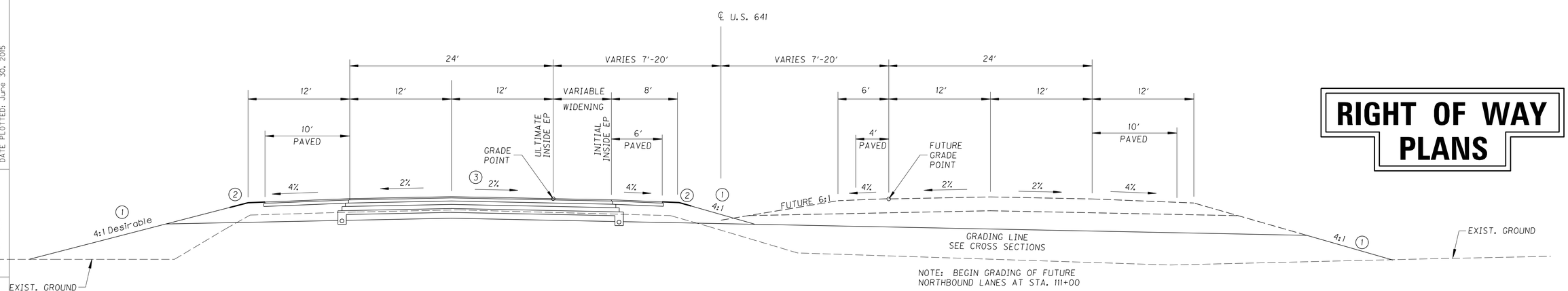

NOTE: BEGIN GRADING OF FUTURE NORTHBOUND LANES AT STA. 111+00

NORMAL SECTION

US 641
STA. 113+50 TO STA. 117+00

RIGHT OF WAY PLANS

SCALE: 1"=

US 641 TYPICAL SECTIONS

FILE NAME: H:\0103 7 US641 CALLOWAY\11-09_LEXINGTON\01037\ROW PLANS 9-7-07\R2A TYPRW.DGN
USER: ekenan
DATE PLOTTED: June 30, 2015
E-SHEET NAME:
MicroStation v8.11.7.529

COUNTY OF	ITEM NO.	SHEET NO.
CALLOWAY	I-314.10	R2B

TYPICAL SECTIONS

NOT TO SCALE

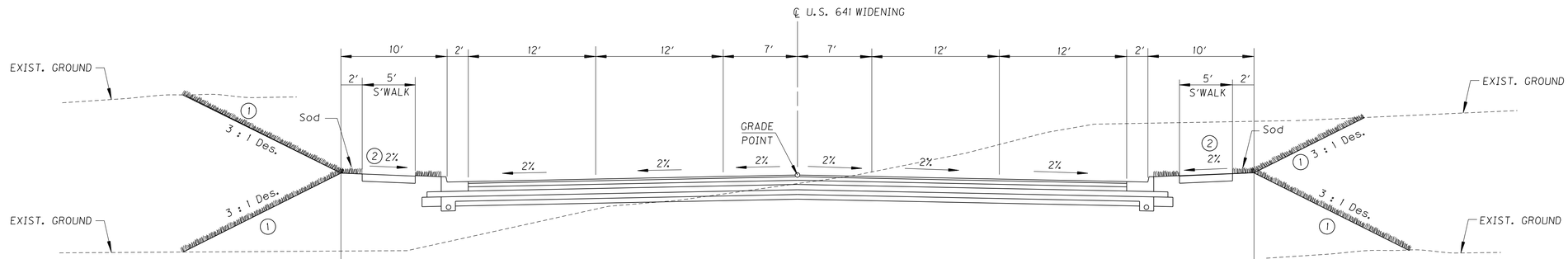

NORMAL SECTION

US 641
STA. 118+74 TO STA. 153+00

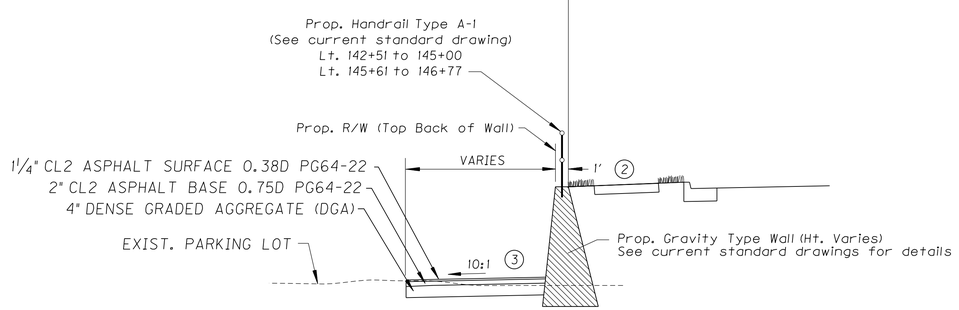

PROP. GRAVITY TYPE WALL

Lt. 142+50 To Lt. 146+78

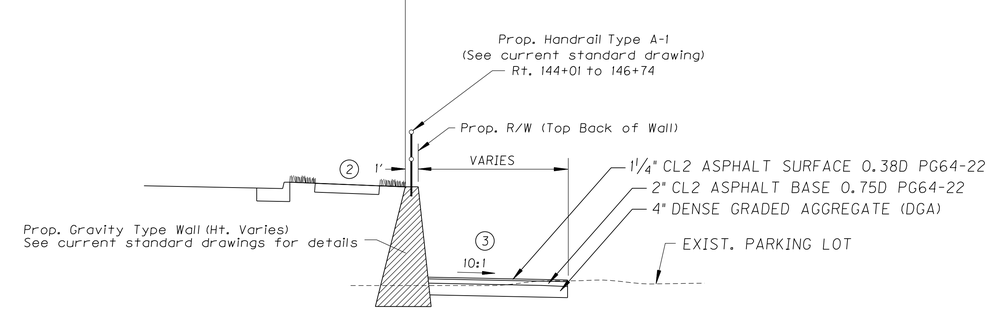

PROP. GRAVITY TYPE WALL

83′ Rt. 144+00 To Rt. 146+75

1. SEE CROSS SECTIONS FOR SLOPES OUTSIDE THE LIMITS OF THE BERM.
2. 2% DESIRABLE, SLOPE VARIES. SEE ENTRANCE PROFILES AND/OR CROSS SECTIONS FOR THE DIRECTION OF SLOPE AND SIDEWALK ELEVATIONS.
3. PROVIDE 10:1 SLOPE FOR POSITIVE DRAINAGE. (SEE CROSS SECTIONS)

RIGHT OF WAY PLANS

SCALE: 1"=

US 641 TYPICAL SECTIONS

FILE NAME: H:\01037 US641 CALLOWAY\H-09_LEXINGTON\01037\ROW PLANS 9-7-07\R2B TYPRW.DGN
USER: ekeenan
DATE PLOTTED: June 30, 2015
E-SHEET NAME:
MicroStation v8.11.7.529

COUNTY OF	ITEM NO.	SHEET NO.
CALLOWAY	I-314.10	R2C

TYPICAL SECTIONS

NOT TO SCALE

(1) SEE CROSS SECTIONS FOR SLOPES OUTSIDE THE LIMITS OF THE SHOULDERS

(2) 2% DESIRABLE, SLOPE VARIES. SEE ENTRANCE PROFILES AND/OR CROSS SECTIONS FOR THE DIRECTION OF SLOPE AND SIDEWALK ELEVATIONS.

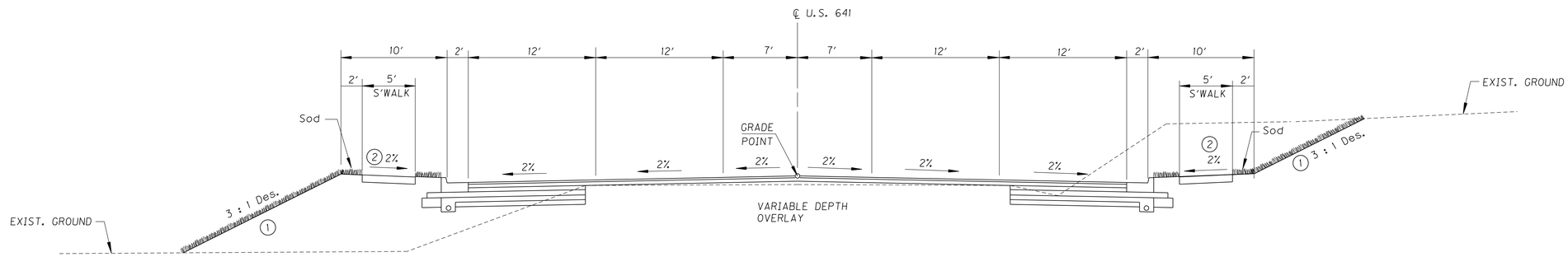

NORMAL SECTION

US 641
STA. 153+00 TO STA. 156+00

RIGHT OF WAY PLANS

SCALE: 1"=

US 641 TYPICAL SECTIONS

MicroStation v8.11.7.529 | E-SHEET NAME: | USER: ekeenan DATE PLOTTED: June 30, 2015 | FILE NAME: H:\01037 US641 CALLOWAY\I-09_LEXINGTON\01037\ROW PLANS 9-7-07\R2C TYPRW.DGN

COUNTY OF	ITEM NO.	SHEET NO.
CALLOWAY	I-314.10	R2D

REVISED PLANS DATE: APRIL 17, 2018

TYPICAL SECTIONS

NOT TO SCALE

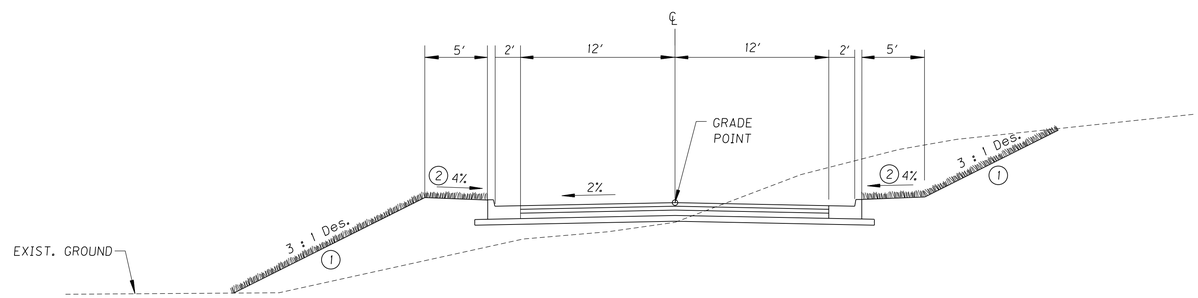

NORMAL SECTION

RIVERWOOD ROAD

RIGHT OF WAY PLANS

SCALE: 1"=

APPROACH TYPICAL SECTIONS

FILE NAME: H:\01037 US641 CALLOWAY\I-09_LEXINGTON\01037\ROW PLANS 9-7-07\R2D TYPRW.DGN

USER: FHOOVER
DATE PLOTTED: April 17, 2018

E-SHEET NAME:

MicroStation v8.11.7.529

COUNTY OF	ITEM NO.	SHEET NO.
CALLOWAY	I-314.10	R2E

TYPICAL SECTIONS

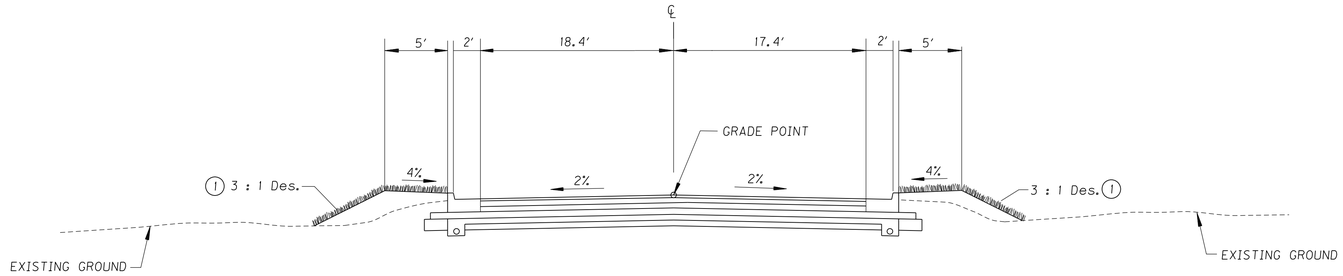

NORMAL SECTION

TABARD DRIVE

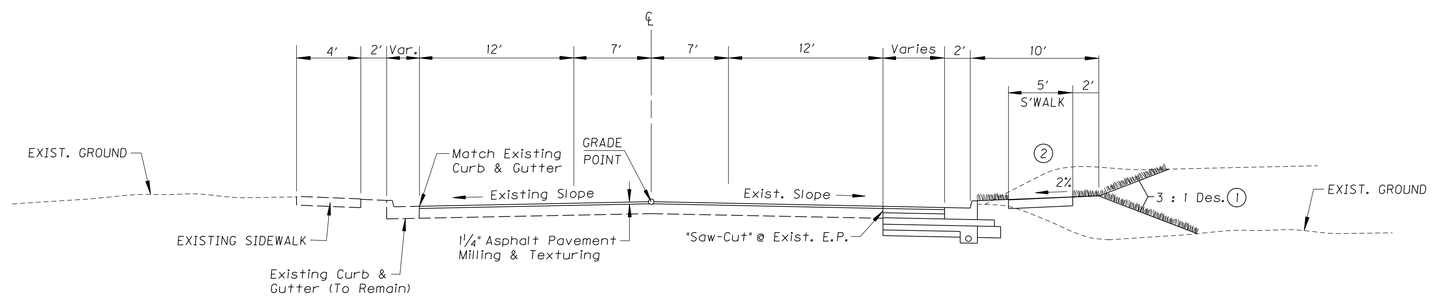

NORMAL SECTION

GLENDALE ROAD (EAST)

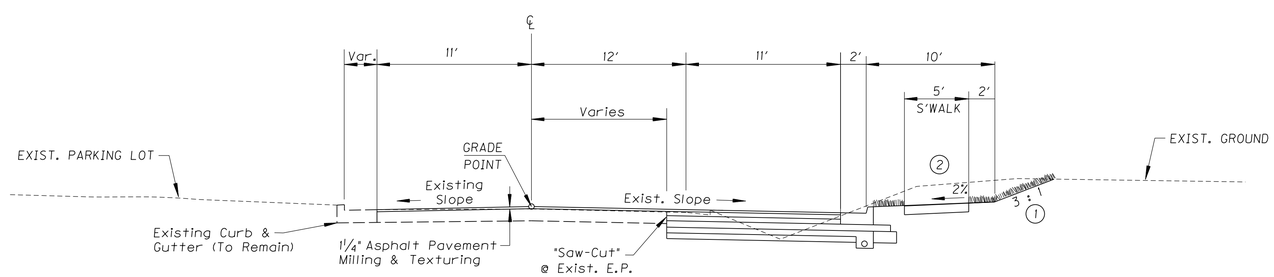

NORMAL SECTION

GLENDALE ROAD (WEST)

STA. 8+80 TO BACK OF RADIUS

(1) SEE CROSS SECTIONS FOR SLOPES OUTSIDE THE LIMITS OF THE SHOULDER.

(2) 2% DESIRABLE, SLOPE VARIES. SEE ENTRANCE PROFILES AND/OR CROSS SECTIONS FOR THE DIRECTION OF SLOPE AND SIDEWALK ELEVATIONS.

RIGHT OF WAY PLANS

NOT TO SCALE

SCALE: 1"=

APPROACH TYPICAL SECTIONS

FILE NAME: H:\01037 US641 CALLOWAY\I-09_LEXINGTON\01037\ROW PLANS 9-7-07\R2E TYPRW.DGN
USER: ekeenan
DATE PLOTTED: June 30, 2015
E-SHEET NAME:
MicroStation v8.11.7.529

COUNTY OF	ITEM NO.	SHEET NO.
CALLOWAY	1-314.10	R2F

TYPICAL SECTIONS

NOT TO SCALE

(1) SEE CROSS SECTIONS FOR SLOPES OUTSIDE THE LIMITS OF THE BERM OR SHOULDER.

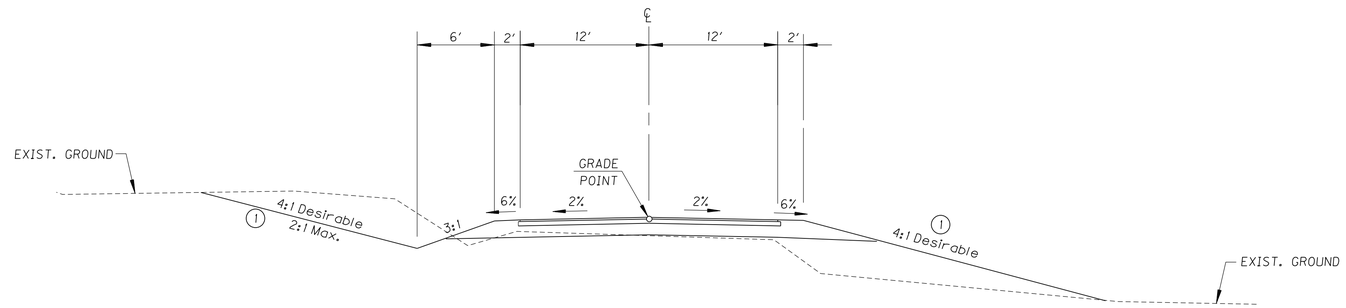

NORMAL SECTION

PEGGY ANN DRIVE

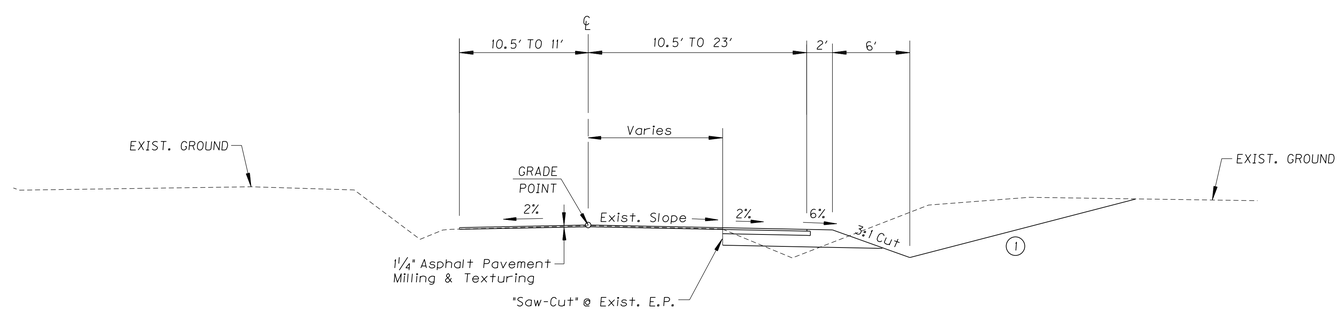

NORMAL SECTION

GLENDALE ROAD (WEST)
STA. 7+30 TO STA. 8+80

RIGHT OF WAY PLANS

SCALE: 1"=

APPROACH TYPICAL SECTIONS

MicroStation v8.11.7.529 | E-SHEET NAME: | USER: ekeenan DATE PLOTTED: June 30, 2015 | FILE NAME: H:\01037 US641 CALLOWAY\11-09_LEXINGTON\01037\ROW PLANS 9-7-07\R2F TYPRW.DGN

COUNTY OF	ITEM NO.	SHEET NO.
CALLOWAY	1-314.10	R2G

TYPICAL SECTIONS

NOT TO SCALE

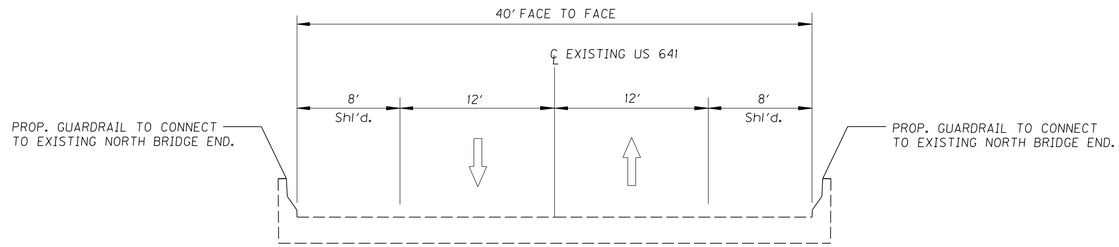

EXISTING BRIDGE SECTION
(FOR INFORMATION ONLY)

EXISTING US 641 BRIDGE OVER MIDDLE FORK CLARKS RIVER

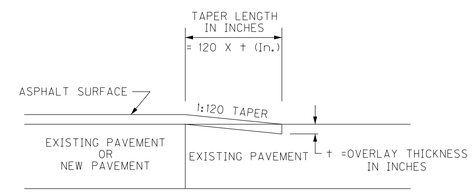

TAPERING OF OVERLAYS ON LOW SPEED FACILITIES (<45 MPH)

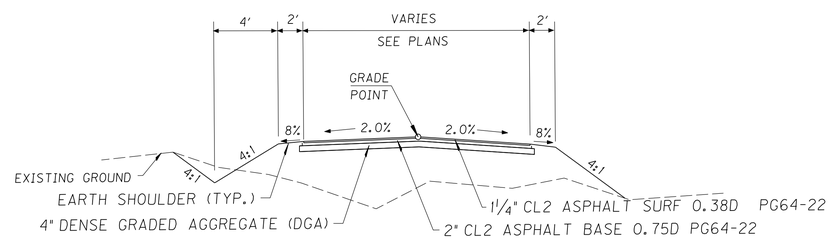

ASPHALT ENTRANCES

RIGHT OF WAY PLANS

SCALE: 1"=

TYPICAL SECTIONS

MicroStation v8.11.7.529 | E-SHEET NAME: | USER: ekeenan DATE PLOTTED: June 30, 2015 | FILE NAME: H:\01037 US641 CALLOWAY\11-09_LEXINGTON\01037\ROW PLANS 9-7-07\R26 TYPRW.DGN

COUNTY OF	ITEM NO.	SHEET NO.
CALLOWAY	1-314.10	R3

CONVENTIONAL SIGNS

SURVEY LINE
GRADE LINE — 400' V.C.
GROUND LINE
COUNTY LINE
CORPORATE LIMITS
EXIST. PROPERTY LINE
EXIST. RIGHT OF WAY & PROPERTY LINE
PROPOSED RIGHT OF WAY
RIGHT OF WAY MONUMENT
BENCH MARK — B.M. NO.4
EXISTING R/W MARKER
RIGHT OF WAY MONUMENT EXISTING/PROPOSED
UTILITY TEST HOLE — TH
EXISTING ROAD
RAILROAD
FENCE (CONTROLLED ACCESS)
FENCE (EXCEPT STONE AND HEDGE)
TREE LINE
TREES
PIPE CULVERT
CULVERT
BRIDGE
BUILDINGS — 1-S FRAME, 1-S BRICK, SHED, 2-S BRICK
GUARDRAIL — END TREATMENT, GUARDRAIL, TERMINAL SECTION

	EXISTING	PROPOSED
LIGHTING POLE		
POWER POLE		
JOINT POWER & TELEPHONE POLE		
TELEPHONE & TELEGRAPH POLE		
ANCHOR, POWER OR TELEPHONE		
STUB POWER		
STUB TELEPHONE		
WATER MAIN	WM	6" WM
GAS MAIN	GM	6" GM
TELEPHONE DUCT	T	T
ELECTRIC DUCT	E	E
DIRECT BURIAL TV CABLE	TV	TV
SANITARY SEWER (WITH MANHOLE)	SAN	SAN
STORM SEWER (WITH MANHOLE)	STORM	STORM
DIRECT BURIAL ELECTRIC CABLE	E	E
DIRECT BURIAL TELEPHONE CABLE	T	T
OVERHEAD WIRE		
TRAFFIC LIGHTS		
ELECTRIC MANHOLE	EMH	EMH
TELEPHONE MANHOLE	TMH	TMH

STONE FENCE
HEDGE FENCE
SWAMP OR MARSH
SPRINGS
SINKHOLE
QUARRY SITE
BLUE LINE STREAM
INTERMITTENT STREAM OR DITCH
LAKES OR PONDS
REGULATED FLOODWAY
NORTH POINT

UTILITY OWNERS

CABLE

Murray Electric System &
Tele Communication
401 Olive Street
P.O. Box 1095
Murray, KY 42071
270-753-5312
Contact: Tony Thompson

Media Com
90 N. Main Street
Benton, Ky. 42025
270-527-3211
Contact: Pam Stockdale

Charter Communications
906 S. 12th Street
Murray, KY 42071
270-753-5005

ELECTRIC

Murray Electric System &
Tele Communication
401 Olive Street
P.O. Box 1095
Murray, KY 42071
270-753-5312
Contact: Tony Thompson

West Kentucky Rural Electric
Cooperative Corp.
1218 West Broadway
Mayfield, KY 42066
270-247-1321
Contact: David Morrill

GAS

A & R Pipe Line.
7845 Hwy. 140 North
P.O. Box 37
Cottage Grove, TN 38224
731-782-3182
Contact: Gary Fuqua

City of Murray
Public Works & Utilities
104 N 5TH
Suite C
Murray, KY 42071
270-762-0330
Contact: David Roberts

TELEPHONE

West Ky. Rural Telephone
Cooperative Corp. Inc.
237 N. 8th St.
Mayfield, KY 42066
270-247-4350
Contact: Jeff Jones

Bell South
1136 S.R. 121 N.
Murray, KY 42071
270-753-3495
Contact: Bill Hilyer

WATER

City of Murray
Public Works & Utilities
104 N 5TH
Suite C
Murray, KY 42071
270-762-0330
Contact: David Roberts

South 641 Water District
207 Main Street
Hazel, KY 42049
270-492-8857
Contact: Hank Standfield

SEWER

City of Murray
Public Works & Utilities
104 N 5TH
SUITE C
Murray, KY 42071
270-762-0330
Contact: David Roberts

ORIGIN OF LEVELS

DESCRIBED BY COAST AND GEODETIC SURVEY 1936 4.3 MILES SOUTH FROM MURRAY, ALONG THE NASHVILLE , CHATTANOOGA AND ST. LOUIS RAILWAY FROM THE STATION AT MURRAY, CALLOWAY COUNTY, 19-2/3 POLES SOUTH OF MILEPOST 45, ABOUT 10 FEET NORTH OF A ROAD CROSSING, 45 FEET EAST OF THE TRACK, AND 1 FOOT INSIDE A YARD FENCE. A STANKARD DISK, STAMPED Y 22 1934 AND SET IN THE TOP OF A CONCRETE POST.

Control Point #112
E 887409.3881
N 1740743.3204
El. 485.40

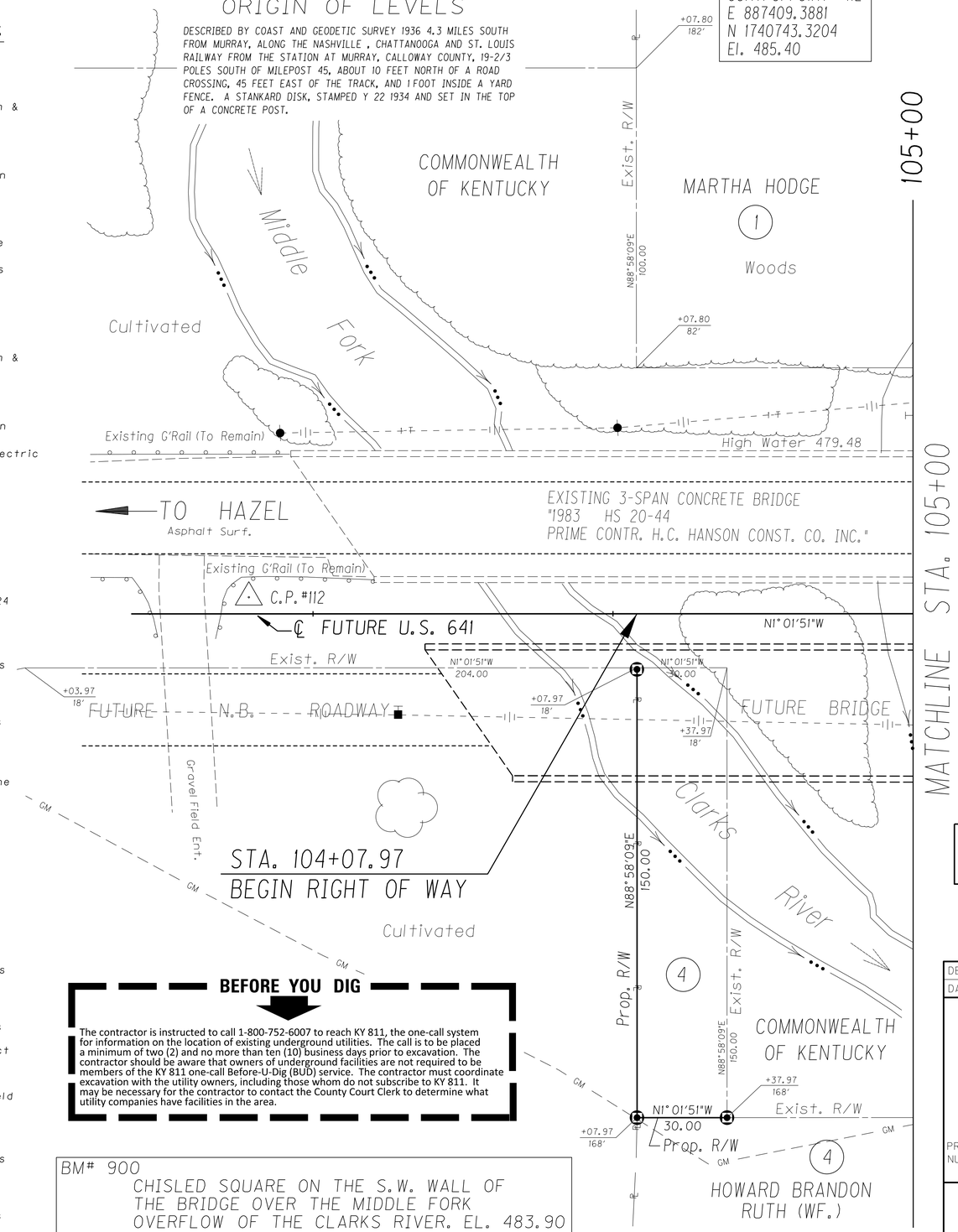

BEFORE YOU DIG

The contractor is instructed to call 1-800-752-6007 to reach KY 811, the one-call system for information on the location of existing underground utilities. The call is to be placed a minimum of two (2) and no more than ten (10) business days prior to excavation. The contractor should be aware that owners of underground facilities are not required to be members of the KY 811 one-call Before-U-Dig (BUD) service. The contractor must coordinate excavation with the utility owners, including those whom do not subscribe to KY 811. It may be necessary for the contractor to contact the County Court Clerk to determine what utility companies have facilities in the area.

BM# 900
CHISLED SQUARE ON THE S.W. WALL OF THE BRIDGE OVER THE MIDDLE FORK OVERFLOW OF THE CLARKS RIVER. EL. 483.90

RIGHT OF WAY PLANS

SCALE: 1"=

DESIGNED BY:
DATE SUBMITTED:

Commonwealth of Kentucky
DEPARTMENT OF HIGHWAYS
COUNTY OF
CALLOWAY

WIDENING OF US 641 FROM THE MIDDLE FORK OF THE CLARKS RIVER TO THE GLENDALE ROAD INTERSECTION.

PROJECT NUMBERS: FD04 018 0641 000-007 MARS #6879001D

PLAN SHEET
US 641 BEGIN PROJECT TO STA 105+00
SCALE 1" = 20'

FILE NAME: H:\01037 US641 CALLOWAY\11-09_LEXINGTON\01037\ROW PLANS 9-7-07\R3 10497-10500.DGN
USER: wiwright DATE PLOTTED: June 30, 2015
E-SHEET NAME:
MicroStation v8.11.7.529

COUNTY OF	ITEM NO.	SHEET NO.
CALLOWAY	1-314.10	R4

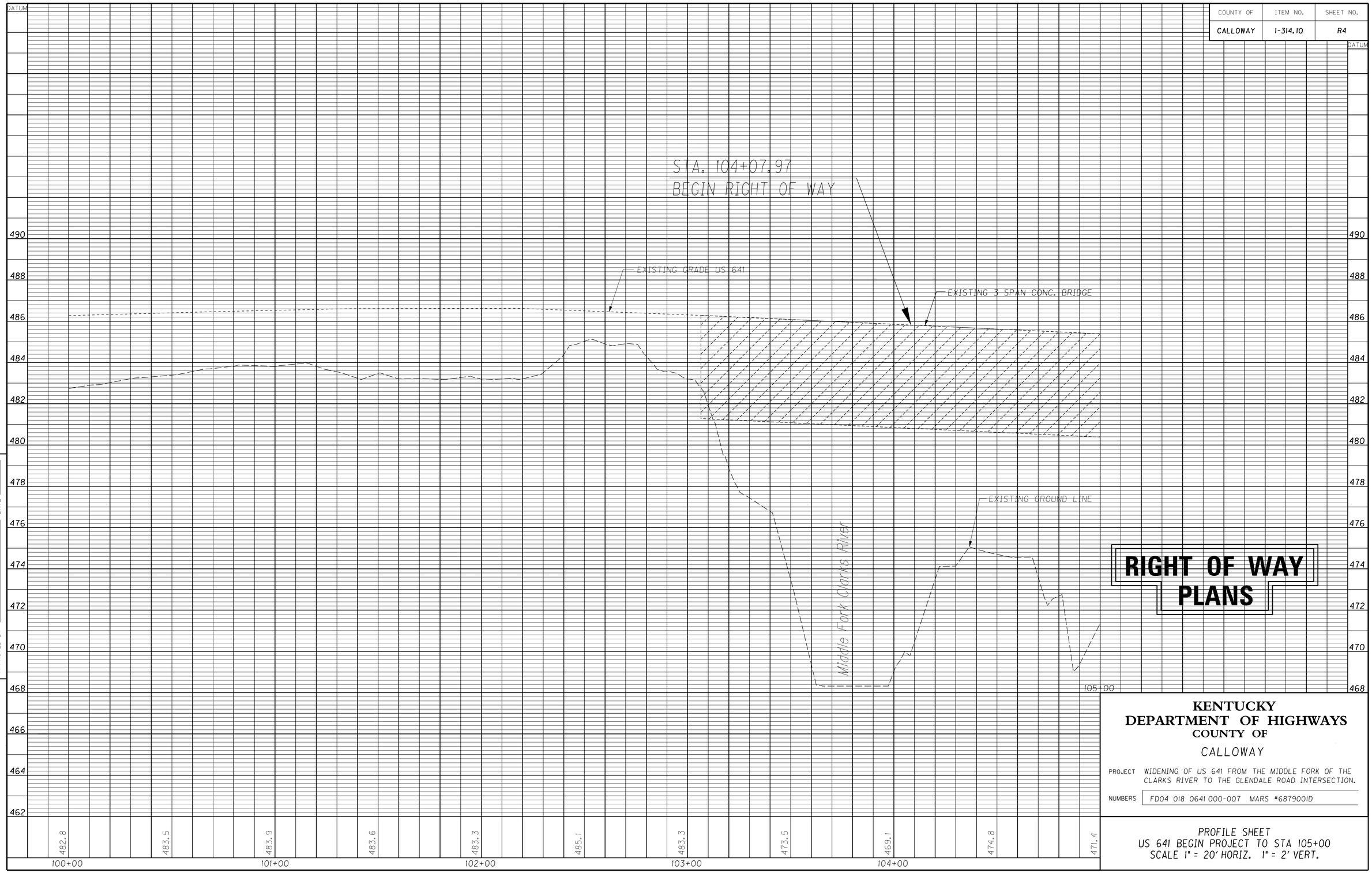

RIGHT OF WAY PLANS

PREPARED BY _____ DATE _____
CHECKED BY _____ DATE _____
APPROVED BY _____

Cell Library: kytc.cel
Cell Name: sp#
DD-MMM-YYYY HH:MM

KENTUCKY
DEPARTMENT OF HIGHWAYS
COUNTY OF
CALLOWAY

PROJECT WIDENING OF US 641 FROM THE MIDDLE FORK OF THE CLARKS RIVER TO THE GLENDALE ROAD INTERSECTION.

NUMBERS FD04 018 0641 000-007 MARS #6879001D

PROFILE SHEET
US 641 BEGIN PROJECT TO STA 105+00
SCALE 1" = 20' HORIZ. 1" = 2' VERT.

COUNTY OF	ITEM NO.	SHEET NO.
CALLOWAY	1-314.10	R5

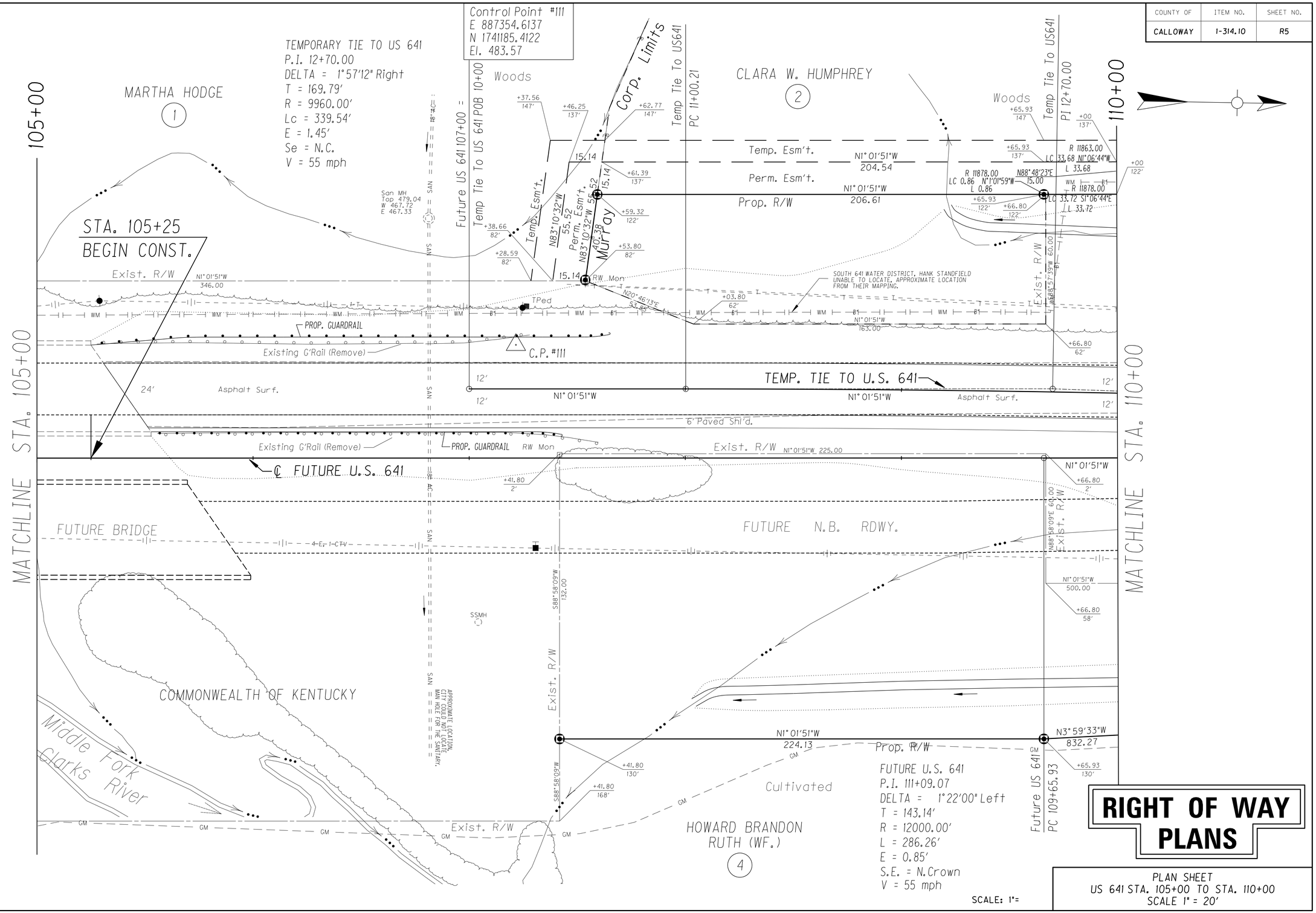

RIGHT OF WAY PLANS

PLAN SHEET
US 641 STA. 105+00 TO STA. 110+00
SCALE 1" = 20'

FILE NAME: H:\01037 US641 CALLOWAY\11-09_LEXINGTON\01037\ROW PLANS 9-7-07\R5 10500-11000.DGN
USER: wiwright
DATE PLOTTED: June 30, 2015
E-SHEET NAME:
MicroStation v8.11.7.529

COUNTY OF	ITEM NO.	SHEET NO.
CALLOWAY	1-314.10	R6

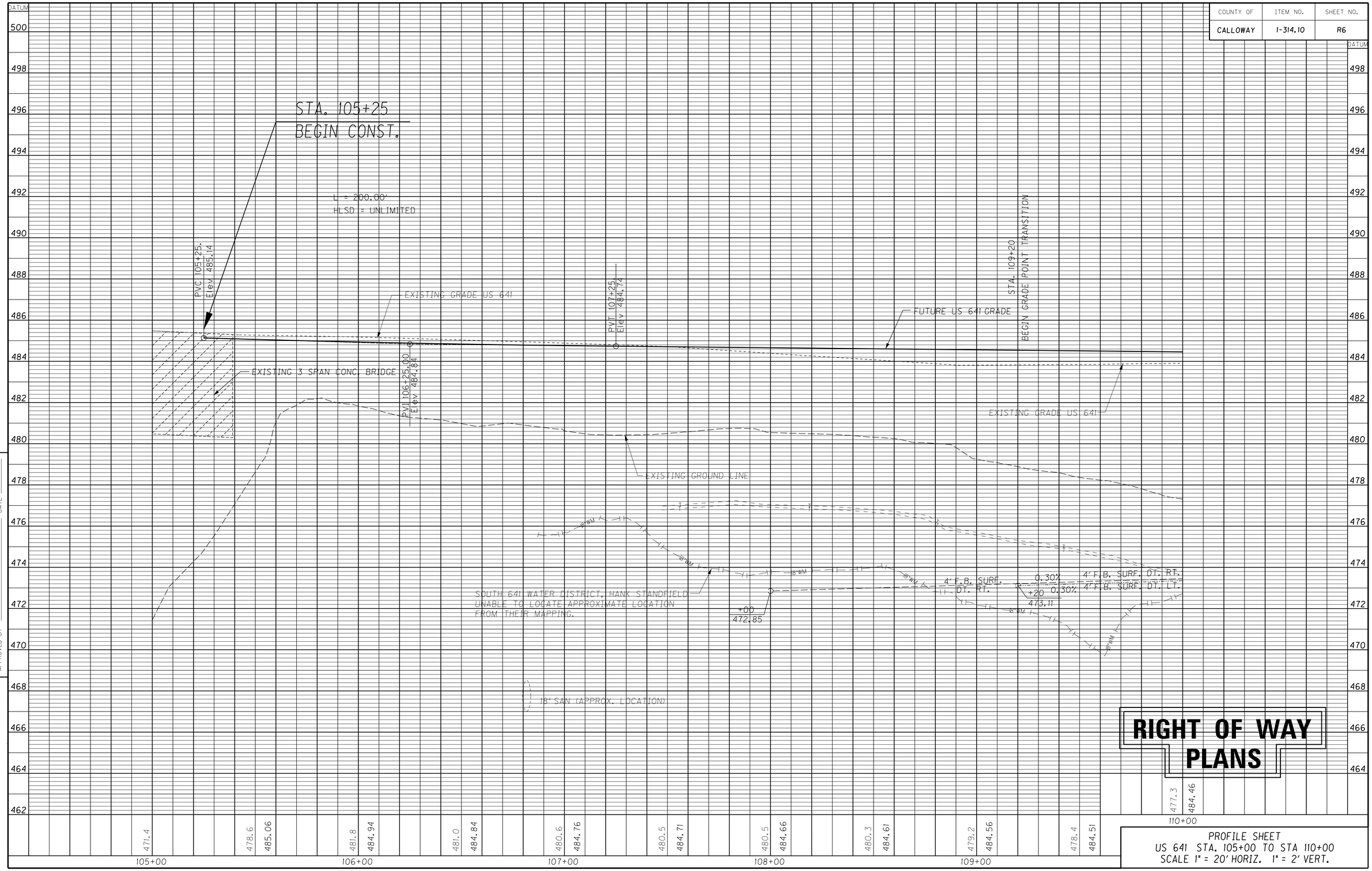

RIGHT OF WAY PLANS

PROFILE SHEET
US 641 STA. 105+00 TO STA 110+00
SCALE 1" = 20' HORIZ. 1" = 2' VERT.

PREPARED BY _____ DATE _____
CHECKED BY _____ DATE _____
APPROVED BY _____

Cell Library: kytc.cel
Cell Name: spf
DD-MMM-YYYY HH:MM

COUNTY OF	ITEM NO.	SHEET NO.
CALLOWAY	1-314.10	R7

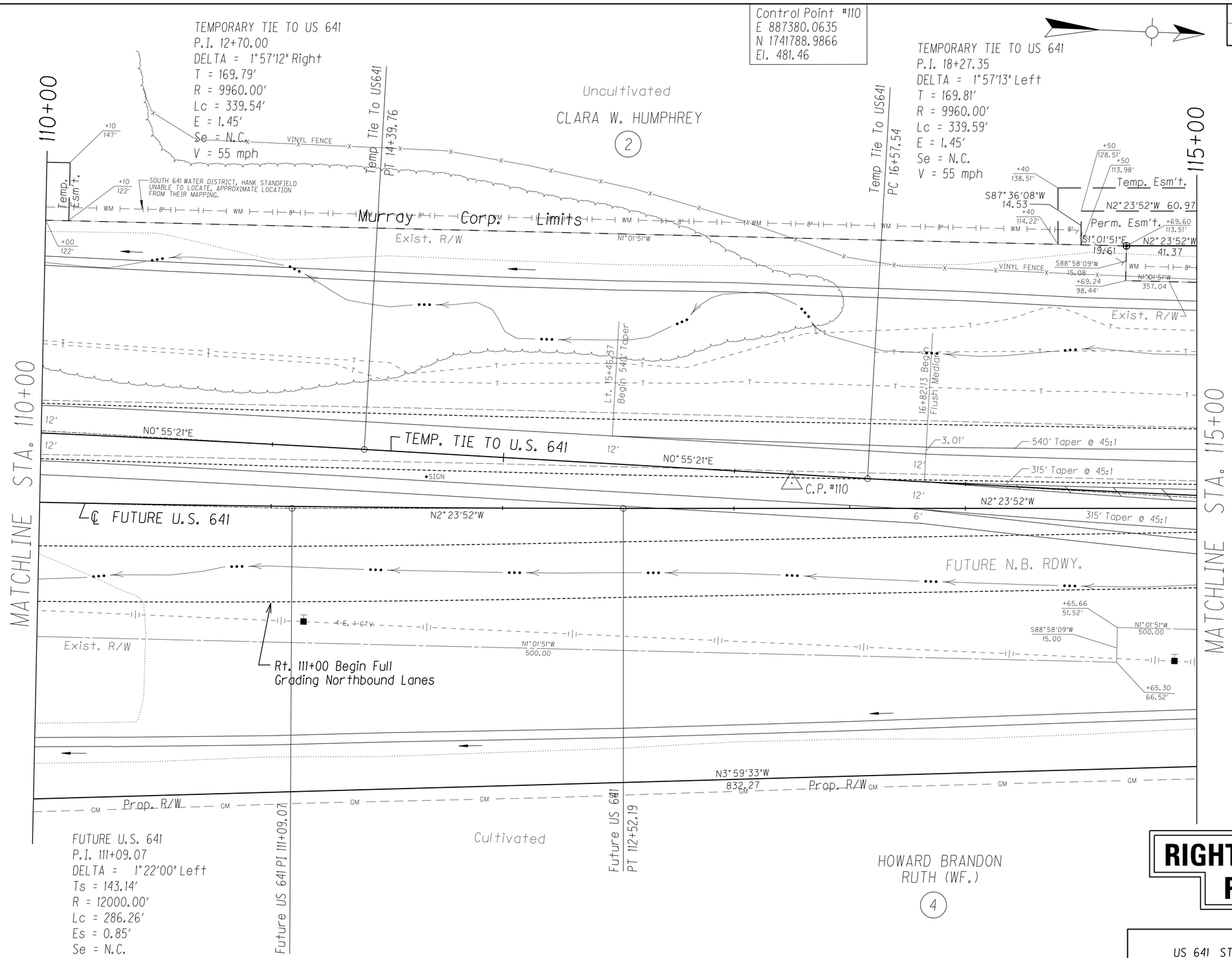

RIGHT OF WAY PLANS

PLAN SHEET
US 641 STA 110+00 TO STA 115+00
SCALE 1" = 20'

SCALE: 1"=

FILE NAME: H:\01037 US641 CALLOWAY\11-09_LEXINGTON\01037\ROW PLANS 9-7-07\R7 11000-11500.DGN
USER: wlwright
DATE PLOTTED: June 30, 2015
E-SHEET NAME:
MicroStation v8.11.7.529

COUNTY OF	ITEM NO.	SHEET NO.
CALLOWAY	I-314.10	R8

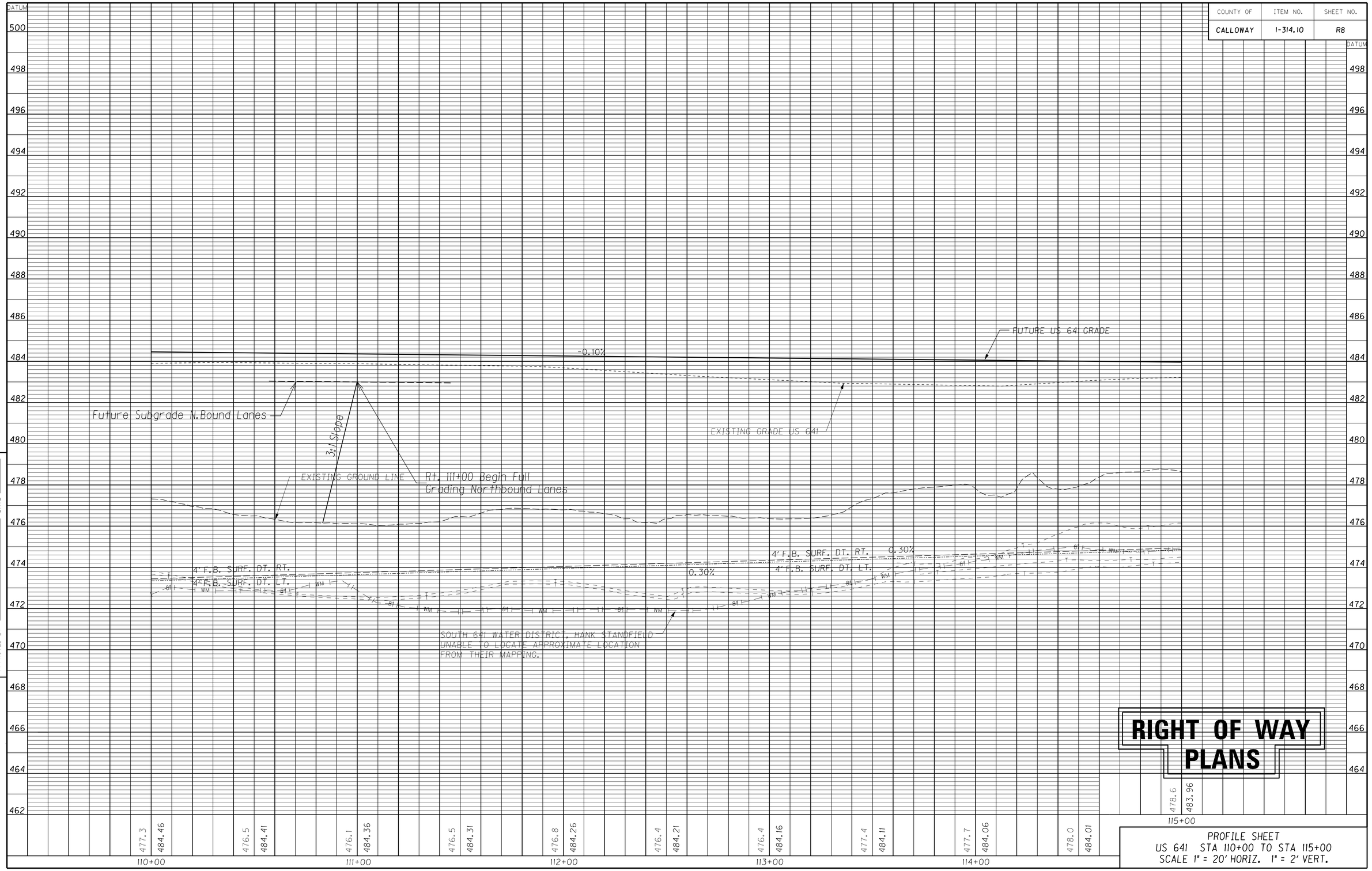

RIGHT OF WAY PLANS

PROFILE SHEET
US 641 STA 110+00 TO STA 115+00
SCALE 1" = 20' HORIZ. 1" = 2' VERT.

PREPARED BY _____ DATE _____
CHECKED BY _____ DATE _____
APPROVED BY _____

Cell Library: kytc.cel
Cell Names: sp*
DD-MMM-YYYY HH:MM

COUNTY OF	ITEM NO.	SHEET NO.
CALLOWAY	1-314.10	R9

REVISED PLANS DATE: JANUARY 4, 2017

Control Point #108
E 887370.0338
N 1742323.2284
El. 482.40

TEMPORARY TIE TO US 641
P.I. 18+27.35
DELTA = 1°57'13" Left
T = 169.81'
R = 9960.00'
Lc = 339.59'
E = 1.45'
Se = N.C.
V = 55 mph

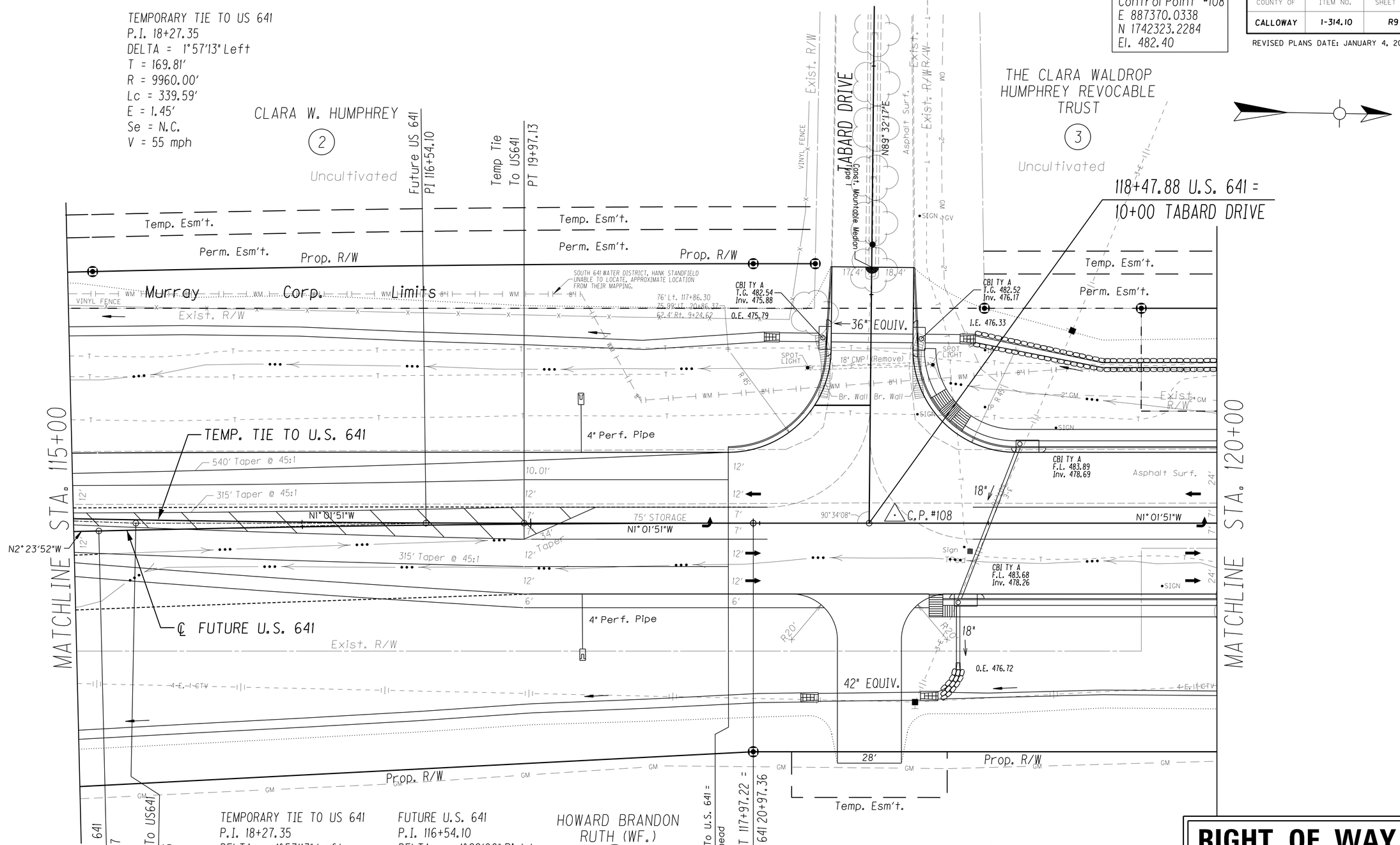

Future US 641
PC 115+10.97

Temp Tie To US641
PI 18+27.35

TEMPORARY TIE TO US 641
P.I. 18+27.35
DELTA = 1°57'13" Left
T = 169.81'
R = 9960.00'
L = 339.59'
E = 1.45'
S.E. = N.C.
V = 55 mph

FUTURE U.S. 641
P.I. 116+54.10
DELTA = 1°22'00" Right
T = 143.13'
R = 12000.00'
L = 286.25'
E = 0.85'
S.E. = N.C.
V = 55 mph

HOWARD BRANDON RUTH (WF.)
4

End Taper
20+86.37 Temp Tie To U.S. 641 =
117+86.30 U.S. 641 Ahead

Future US 641 PT 117+97.22 =
Temp Tie To US 641 20+97.36

RT. 118+48 US 641 CONST. 28' ENTRANCE
W/ 222 S.Y. OF DENSE GRADED AGGREGATE
218 S.Y. OF CL2 ASPHALT BASE AND
217 S.Y. OF CL2 ASPHALT SURFACE
AND 60' OF 42" (EQUIV.) CULVERT PIPE
W/2 42" EQUIV. METAL END SECTIONS TYPE 3.

SCALE: 1"=

RIGHT OF WAY PLANS

PLAN SHEET
US 641 STA 115+00 TO STA 120+00
SCALE 1" = 20'

FILE NAME: H:\01037 US641 CALLOWAY\11-09_LEXINGTON\01037\ROW PLANS 9-7-07\R9 11500-12000.DGN
USER: fhoover
DATE PLOTTED: January 4, 2017
E-SHEET NAME:
MicroStation v8.11.7.529

COUNTY OF	ITEM NO.	SHEET NO.
CALLOWAY	1-314.10	R10

REVISED PLANS DATE: JANUARY 4, 2017

Control Point #108
E 887370.0338
N 1742323.2284
El. 482.40

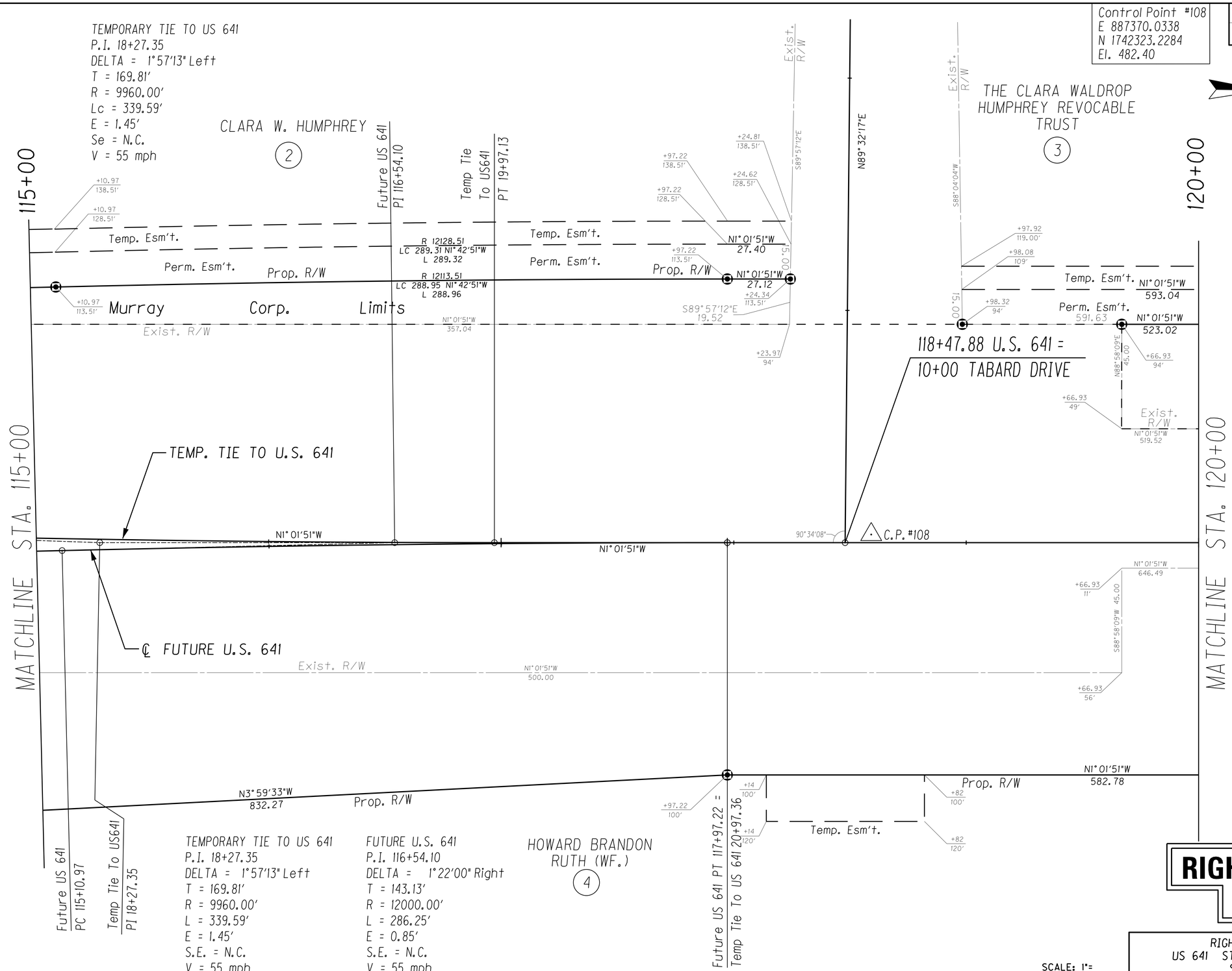

RIGHT OF WAY PLANS

RIGHT OF WAY SHEET
US 641 STA 115+00 TO STA 120+00
SCALE 1" = 20'

SCALE: 1"=

FILE NAME: H:\0037 US641 CALLOWAY\11-09_LEXINGTON\0037\ROW PLANS 9-7-07\R10 11500-12000RW.DGN
USER: thoover
DATE PLOTTED: January 4, 2017
E-SHEET NAME:
MicroStation v8.11.7.529

COUNTY OF	ITEM NO.	SHEET NO.
CALLOWAY	1-314.10	R11

REVISED PLANS DATE: JANUARY 4, 2017

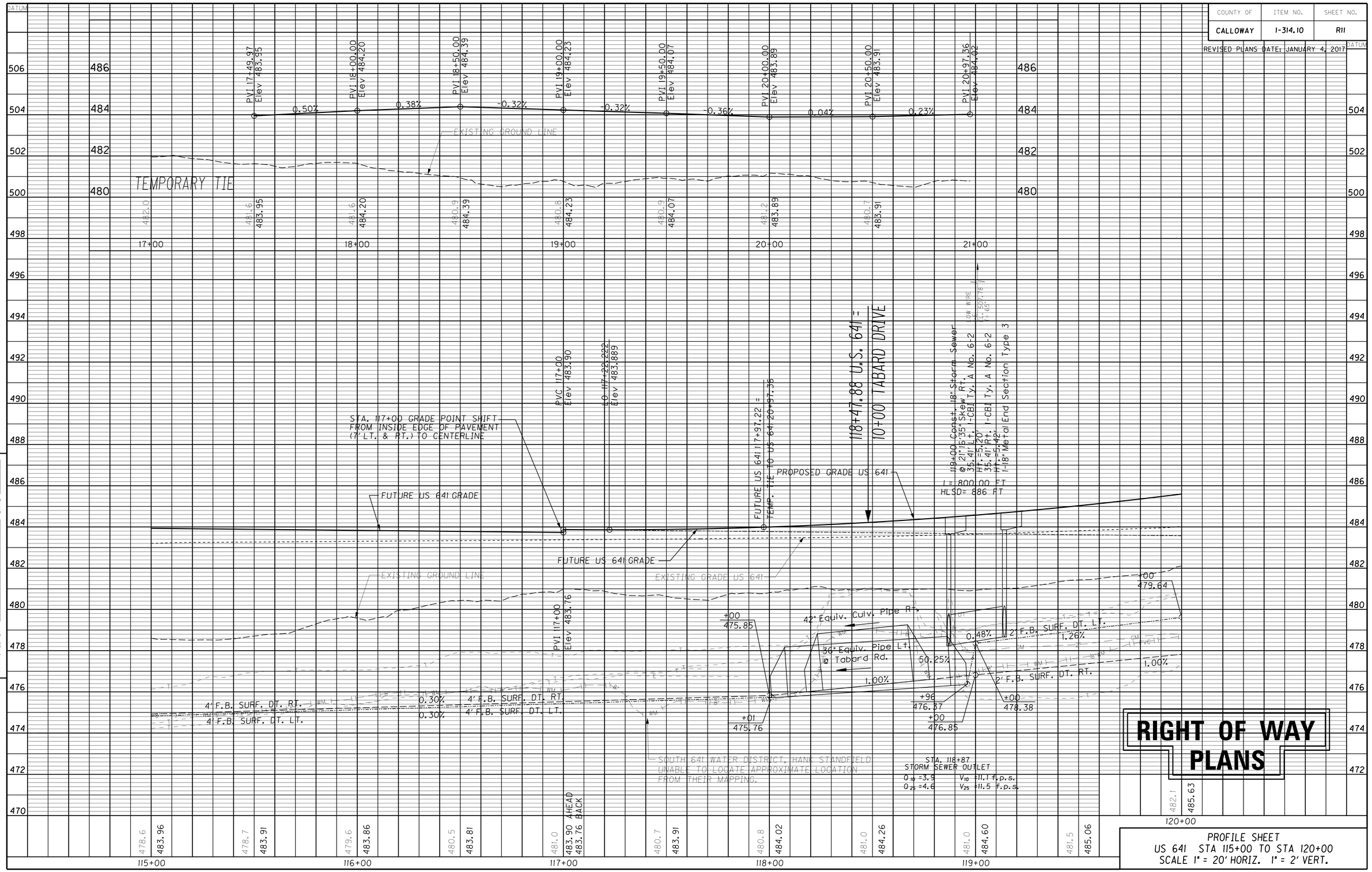

RIGHT OF WAY PLANS

PROFILE SHEET
US 641 STA 115+00 TO STA 120+00
SCALE 1" = 20' HORIZ. 1" = 2' VERT.

PREPARED BY _____ DATE _____
CHECKED BY _____ DATE _____
APPROVED BY _____

Cell Library: kytc.cel
Cell Names: sb1
DD-MMM-YYYY HH:MM

COUNTY OF	ITEM NO.	SHEET NO.
CALLOWAY	1-314.10	R12

REVISED PLANS DATE: JANUARY 4, 2017

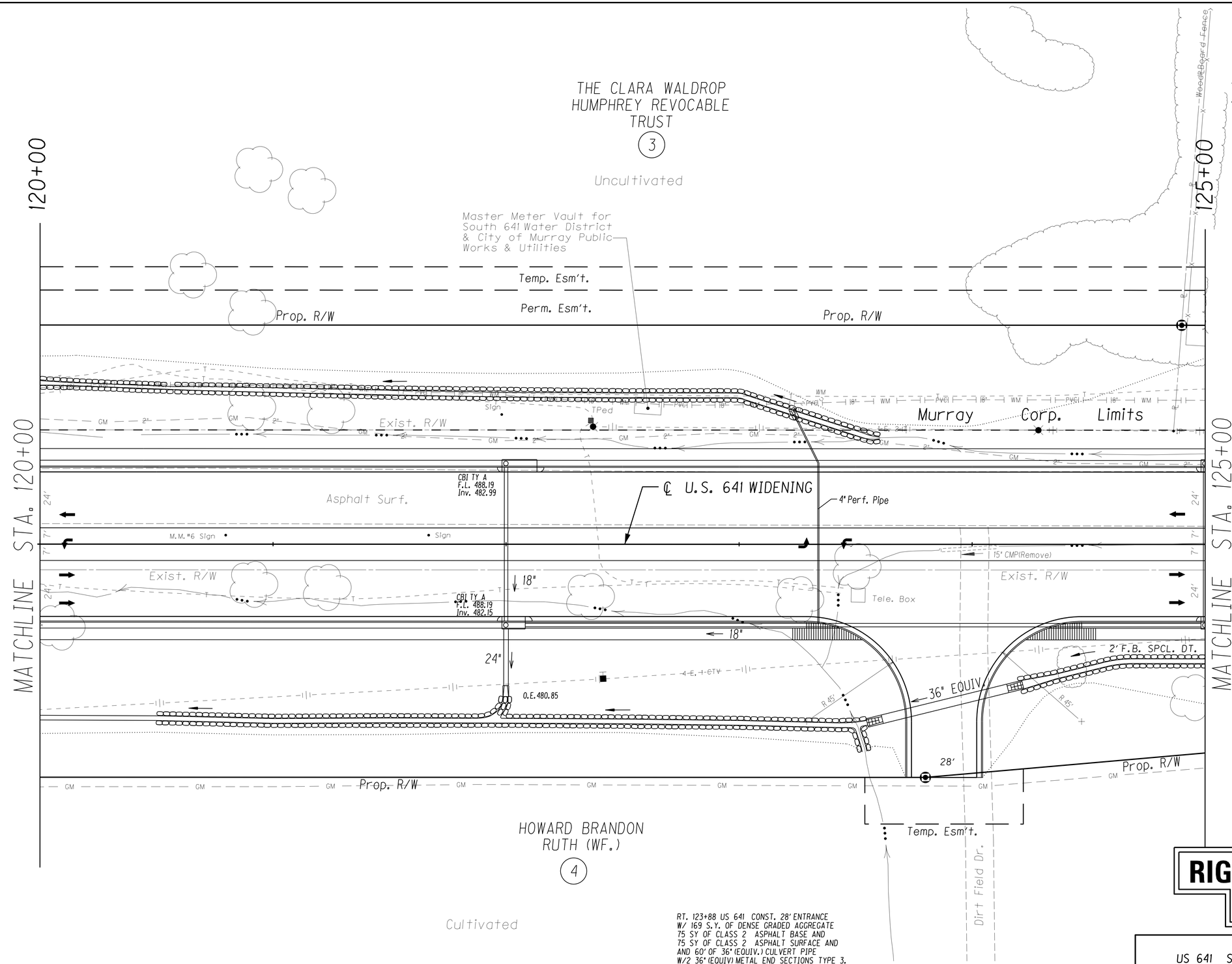

RT. 123+88 US 641 CONST. 28' ENTRANCE
W/ 169 S.Y. OF DENSE GRADED AGGREGATE
75 SY OF CLASS 2 ASPHALT BASE AND
75 SY OF CLASS 2 ASPHALT SURFACE AND
AND 60' OF 36" (EQUIV.) CULVERT PIPE
W/2 36" (EQUIV) METAL END SECTIONS TYPE 3.

SCALE: 1"=

RIGHT OF WAY PLANS

PLAN SHEET
US 641 STA 120+00 TO STA 125+00
SCALE 1" = 20'

FILE NAME: H:\01037 US641 CALLOWAY\11-09_LEXINGTON\01037\ROW PLANS 9-7-07\R12 12000-12500.DGN

USER: fhoover
DATE PLOTTED: January 4, 2017

E-SHEET NAME:

MicroStation v8.11.7.529

COUNTY OF	ITEM NO.	SHEET NO.
CALLOWAY	1-314.10	R13

REVISED PLANS DATE: JANUARY 4, 2017

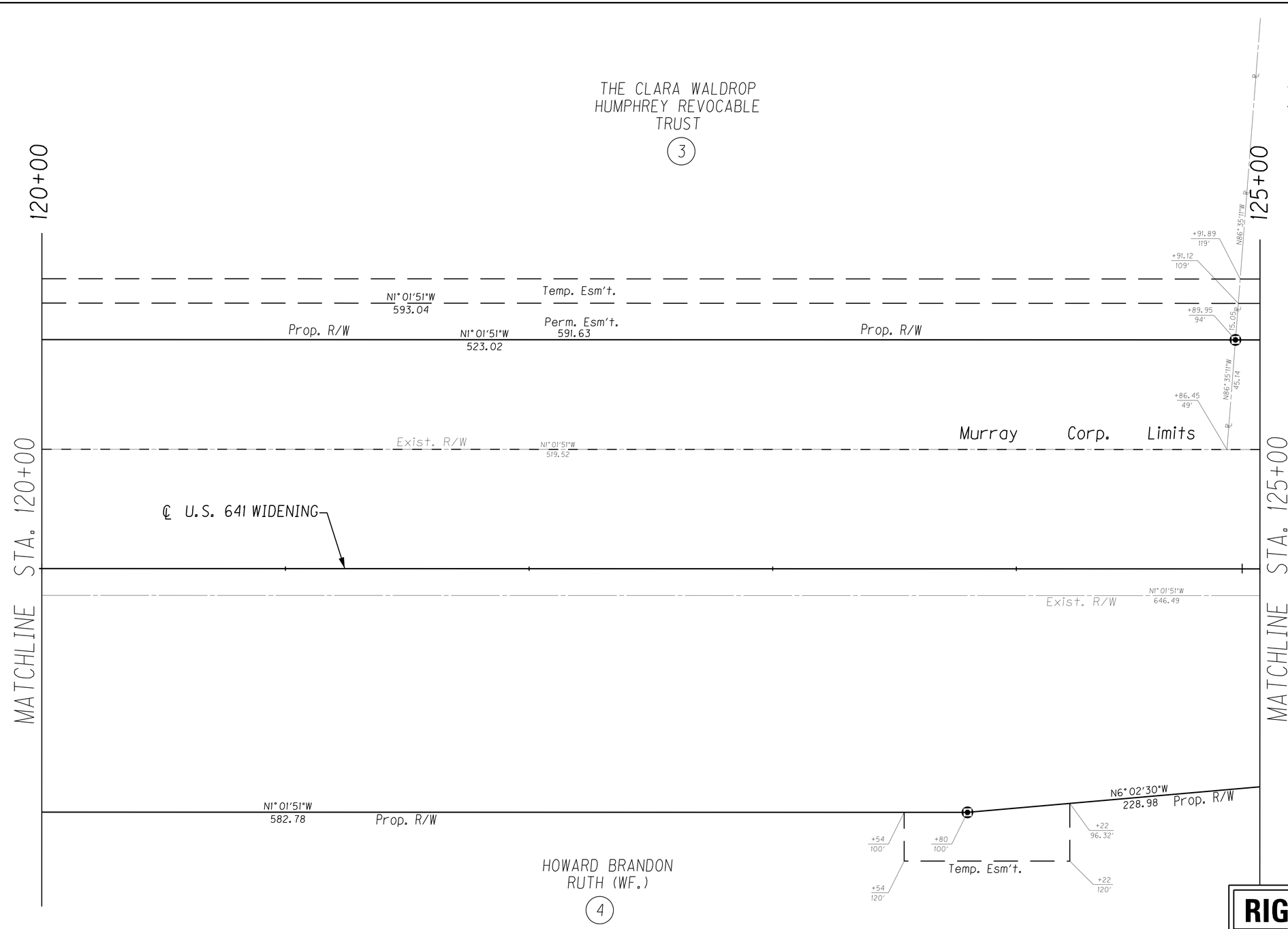

RIGHT OF WAY PLANS

RIGHT OF WAY SHEET
US 641 STA 120+00 TO STA 125+00
SCALE 1" = 20'

SCALE: 1"=

FILE NAME: H:\01037 US641 CALLOWAY\11-09_LEXINGTON\01037\ROW PLANS 9-7-07\R13 12000-12500RW.DGN

USER: fhoover
DATE PLOTTED: January 4, 2017

E-SHEET NAME:

MicroStation v8.11.7.529

COUNTY OF	ITEM NO.	SHEET NO.
CALLOWAY	1-314.10	R14

REVISED PLANS DATE: JANUARY 4, 2017

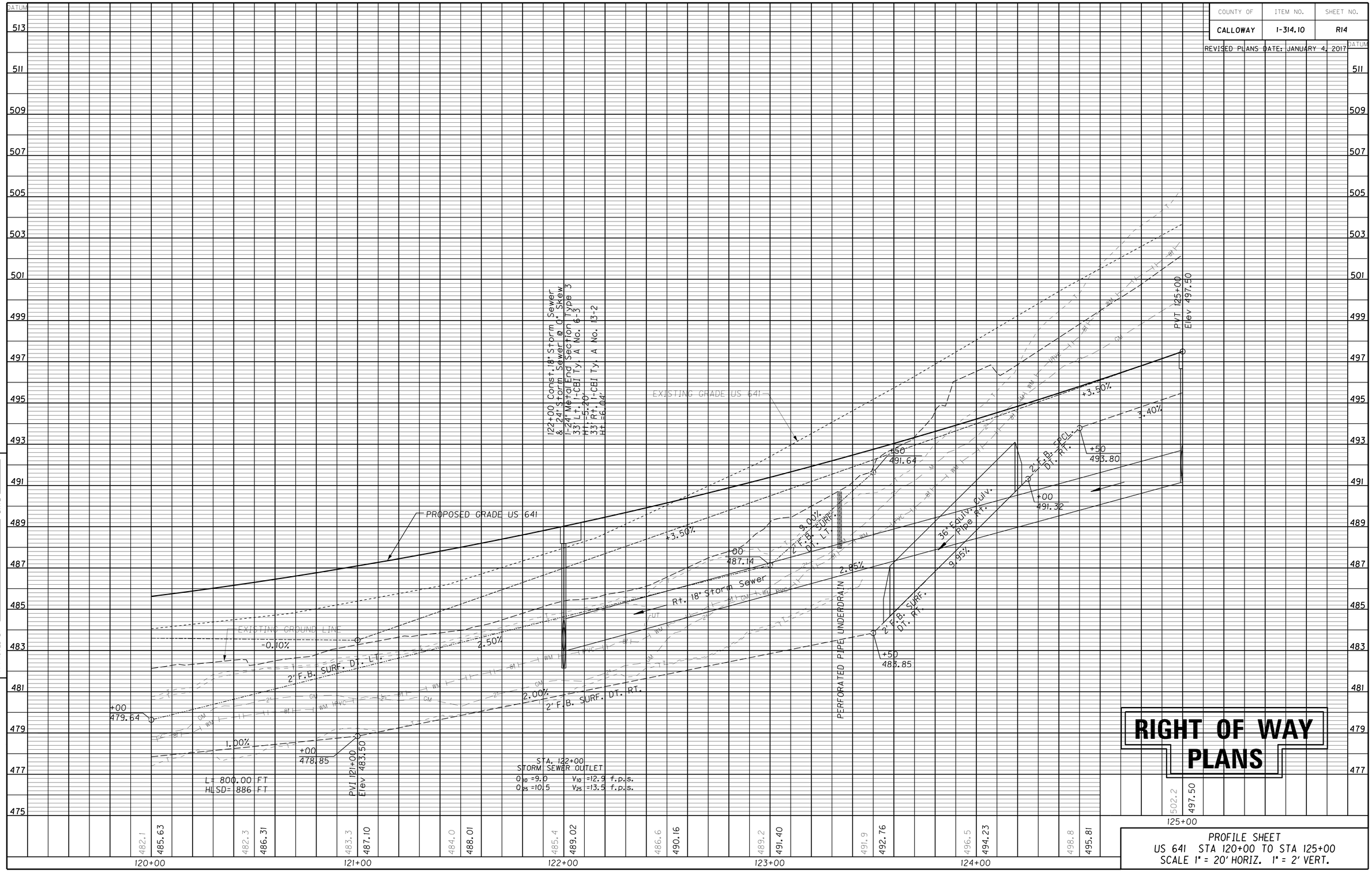

PREPARED BY _____ DATE _____
CHECKED BY _____ DATE _____
APPROVED BY _____

Cell Library: kytc.cel
Cell Name: sp-f
DD-MMM-YYYY HH:MM

RIGHT OF WAY PLANS

PROFILE SHEET
US 641 STA 120+00 TO STA 125+00
SCALE 1" = 20' HORIZ. 1" = 2' VERT.

COUNTY OF	ITEM NO.	SHEET NO.
CALLOWAY	1-314.10	R15

Control Point #106
E 887321.2917
N 1743209.6216
El. 510.23

LT. 127+17 US 641 CONST. 12' ENTRANCE
W/ 113 S.Y. OF DENSE GRADED AGGREGATE
95 S.Y. OF CLASS 2 ASPHALT BASE AND
92 S.Y. OF CLASS 2 ASPHALT SURFACE AND
20 S.Y. OF CEM. CONC. ENT. PAVEMENT 8-INCH.

LT. 127+58 US 641 CONST. 12' ENTRANCE
W/ 113 S.Y. OF DENSE GRADED AGGREGATE
95 S.Y. OF CLASS 2 ASPHALT BASE AND
92 S.Y. OF CLASS 2 ASPHALT SURFACE AND
20 S.Y. OF CEM. CONC. ENT. PAVEMENT 8-INCH.

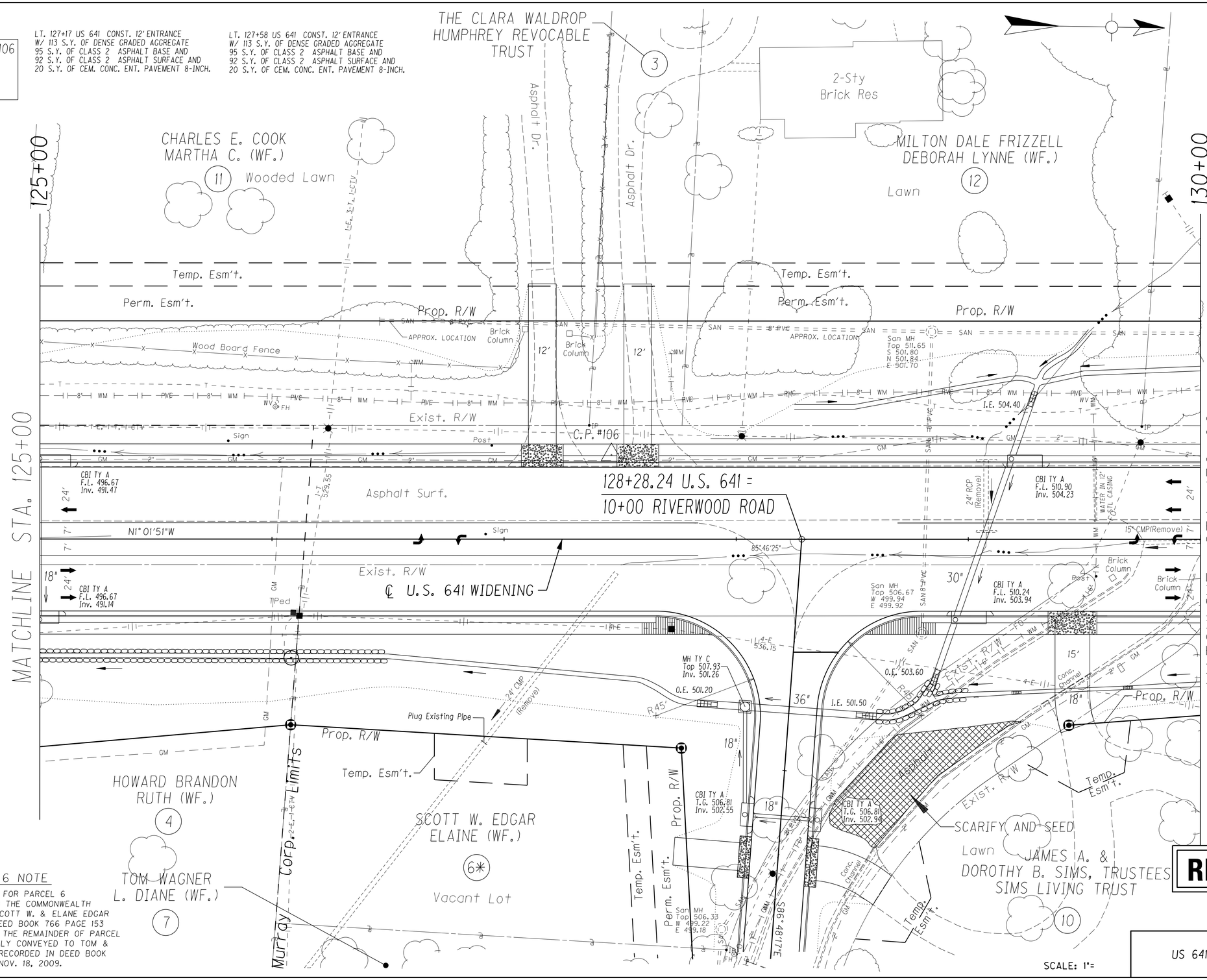

RT. 129+45 US 641 CONST. 15' ENTRANCE
W/ 90 S.Y. OF DENSE GRADED AGGREGATE
70 S.Y. OF CLASS 2 ASPHALT BASE AND
67 S.Y. OF CLASS 2 ASPHALT SURFACE AND
24 S.Y. OF CEM. CONC. ENT. PAVEMENT 8-INCH
AND 44' OF 18" ENTRANCE PIPE
W/2 18" METAL END SECTIONS TYPE 1.

✳ PARCEL 6 NOTE

R/W & EASEMENTS FOR PARCEL 6 WERE CONVEYED TO THE COMMONWEALTH OF KENTUCKY BY SCOTT W. & ELANE EDGAR AS RECORDED IN DEED BOOK 766 PAGE 153 ON AUG. 29, 2008. THE REMAINDER OF PARCEL 6 WAS SUBSEQUENTLY CONVEYED TO TOM & DIANE WAGNER AS RECORDED IN DEED BOOK 820 PAGE 623 ON NOV. 18, 2009.

RIGHT OF WAY PLANS

PLAN SHEET
US 641 STA 125+00 TO STA 130+00
SCALE 1" = 20'

SCALE: 1"=

FILE NAME: H:\0I037 US641 CALLOWAY\11-09_LEXINGTON\0I037\ROW PLANS 9-7-07\R15 12500-13000.DGN
USER: wiwright
DATE PLOTTED: June 30, 2015
E-SHEET NAME:
MicroStation v8.11.7.529

COUNTY OF	ITEM NO.	SHEET NO.
CALLOWAY	1-314.10	R16

REVISED PLAN DATE: AUGUST 18, 2015

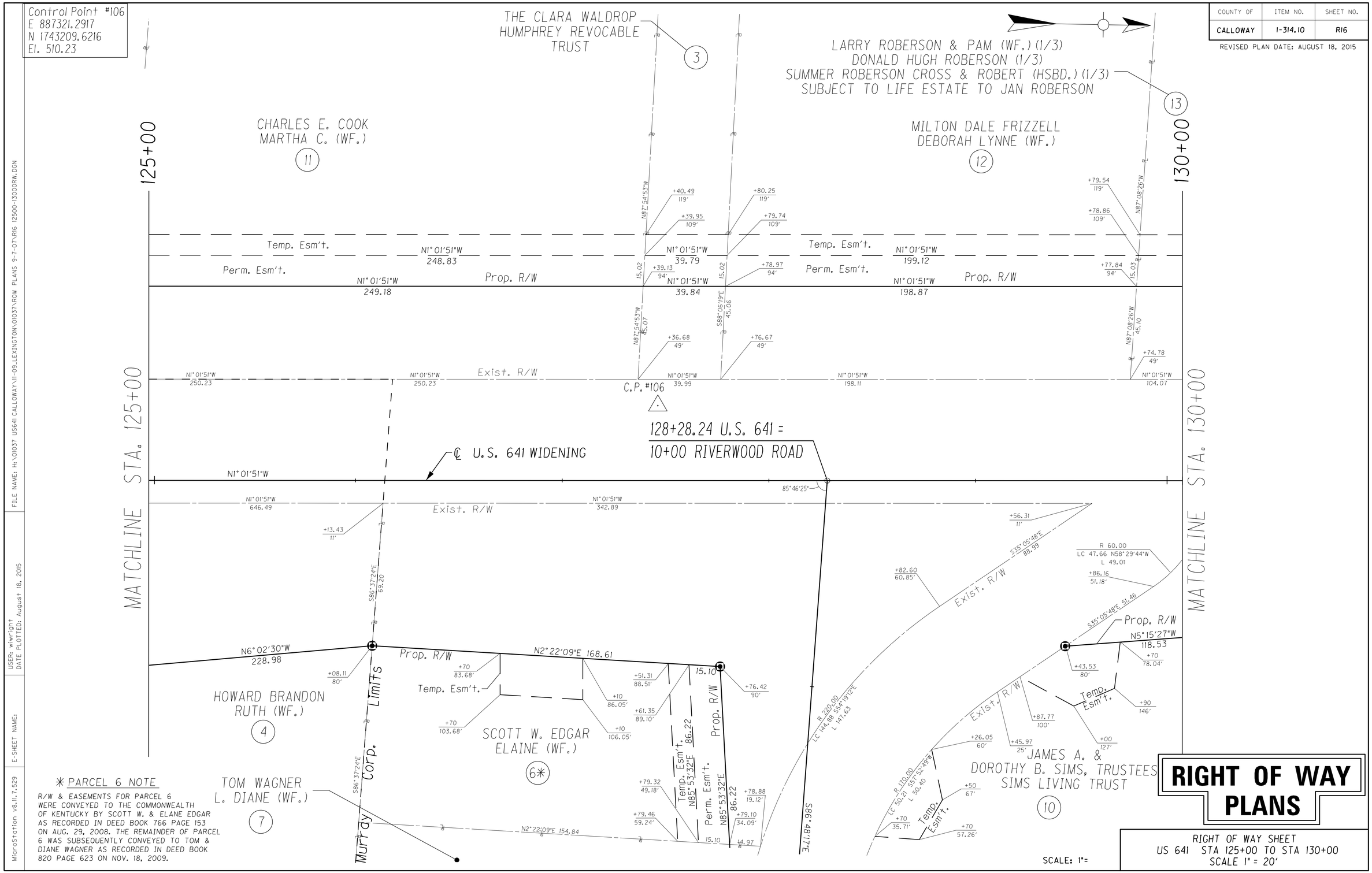

FILE NAME: H:\01037 US641 CALLOWAY\11-09_LEXINGTON\01037\ROW PLANS 9-7-07\R16 12500-13000RW.DGN

USER: wiwright
DATE PLOTTED: August 18, 2015

E-SHEET NAME:

MicroStation v8.11.7.529

COUNTY OF	ITEM NO.	SHEET NO.
CALLOWAY	1-314.10	R17

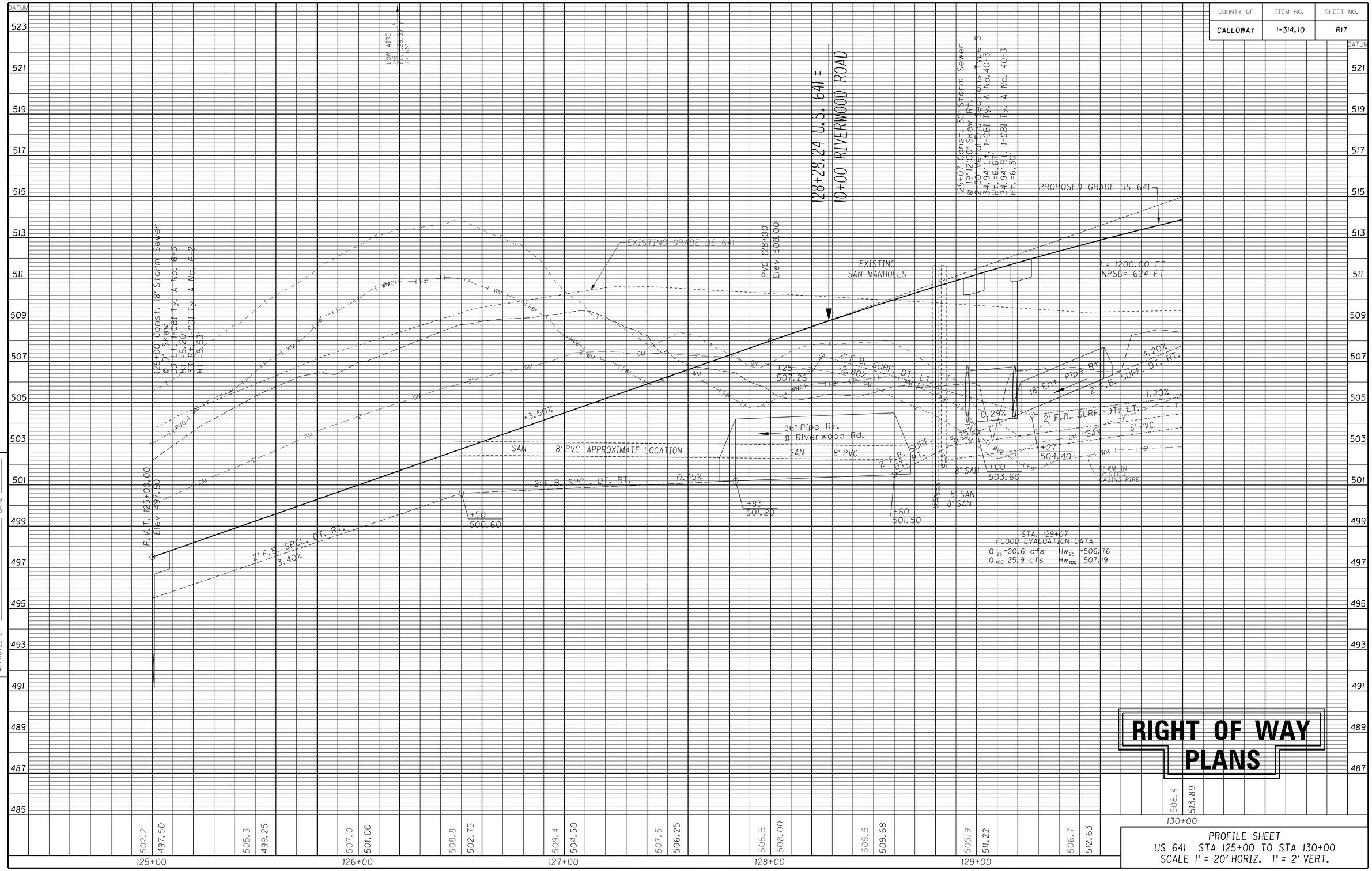

PREPARED BY _____ DATE _____
CHECKED BY _____ DATE _____
APPROVED BY _____

Cell Library: kytc.cel
Cell Name: spf
DD-MMM-YYYY HH:MM

RIGHT OF WAY PLANS

PROFILE SHEET
US 641 STA 125+00 TO STA 130+00
SCALE 1" = 20' HORIZ. 1" = 2' VERT.

COUNTY OF	ITEM NO.	SHEET NO.
CALLOWAY	1-314.10	R18

REVISED PLANS DATE: NOVEMBER 18, 2016

Control Point #105
E 887359.8644
N 1743467.4681
El. 508.34

LT. 131+00 US 641 CONST. 12' ENTRANCE
W/ 20 S.Y. OF DENSE GRADED AGGREGATE
AND 20 S.Y. OF CEM. CONC. ENT. PAVEMENT
8-INCH

LT. 132+66 US 641 CONST. 12' ENTRANCE
W/ 110 S.Y. OF DENSE GRADED AGGREGATE
87 S.Y. OF CLASS 2 ASPHALT BASE AND
86 S.Y. OF CLASS 2 ASPHALT SURFACE AND
20 S.Y. OF CEM. CONC. ENT. PAVEMENT 8-INCH
AND 47' OF 15" ENTRANCE PIPE
W/2 15" METAL END SECTIONS TYPE I.

LT. 134+25 US 641 CONST. 12' ENTRANCE
W/ 20 S.Y. OF DENSE GRADED AGGREGATE
AND 20 S.Y. OF CEM. CONC. ENT. PAVEMENT
8-INCH

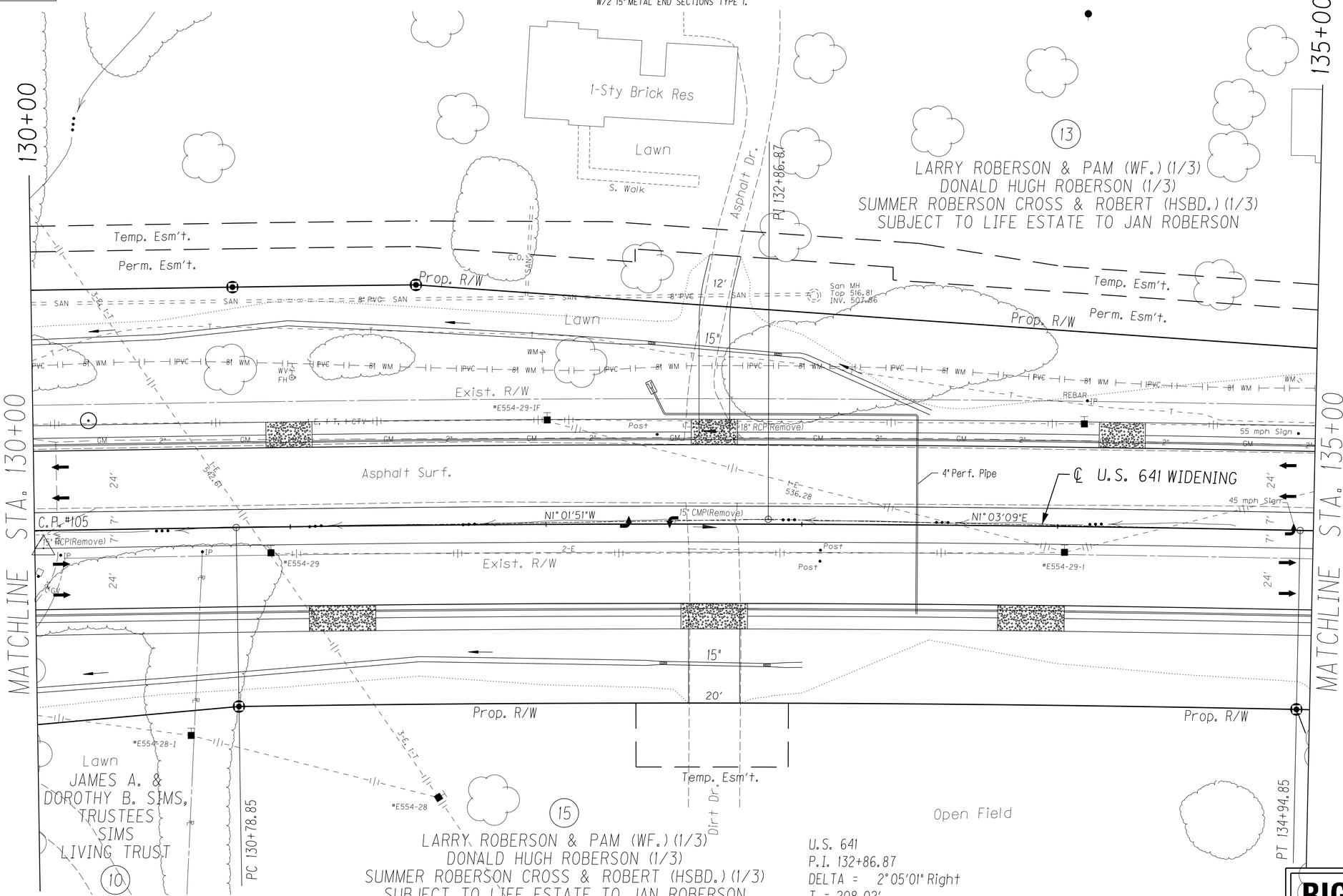

U.S. 641
P.I. 132+86.87
DELTA = 2°05'01" Right
T = 208.02'
R = 11440.00'
L = 416.00'
E = 1.89'
S.E. = N.Crown
V = 45 mph

RT. 131+20 US 641 CONST. 20' ENTRANCE
W/ 29 S.Y. OF DENSE GRADED AGGREGATE
AND 29 S.Y. OF CEM. CONC. ENT. PAVEMENT
8-INCH

RT. 132+66 US 641 CONST. 20' ENTRANCE
W/ 95 S.Y. OF DENSE GRADED AGGREGATE
65 S.Y. OF CL2 ASPHALT BASE AND
64 S.Y. OF CL2 ASPHALT SURFACE AND
29 S.Y. OF CEM. CONC. ENT. PAVEMENT 8-INCH
AND 38' OF 15" ENTRANCE PIPE
W/2 15" METAL END SECTIONS TYPE I.

RT. 133+90 US 641 CONST. 20' ENTRANCE
W/ 29 S.Y. OF DENSE GRADED AGGREGATE
AND 29 S.Y. OF CEM. CONC. ENT. PAVEMENT
8-INCH

SCALE: 1"=

RIGHT OF WAY PLANS

PLAN SHEET
US 641 STA 130+00 TO STA 135+00
SCALE 1" = 20'

FILE NAME: H:\01037 US641 CALLOWAY\11-09_LEXINGTON\01037\ROW PLANS 9-7-07\R18 13000-13500.DGN
USER: fhoover
DATE PLOTTED: November 18, 2016
E-SHEET NAME:
MicroStation v8.11.7.529

COUNTY OF	ITEM NO.	SHEET NO.
CALLOWAY	1-314.10	R19

REVISED PLAN DATE: OCTOBER 12, 2015

Control Point #105
E 887359.8644
N 1743467.4681
El. 508.34

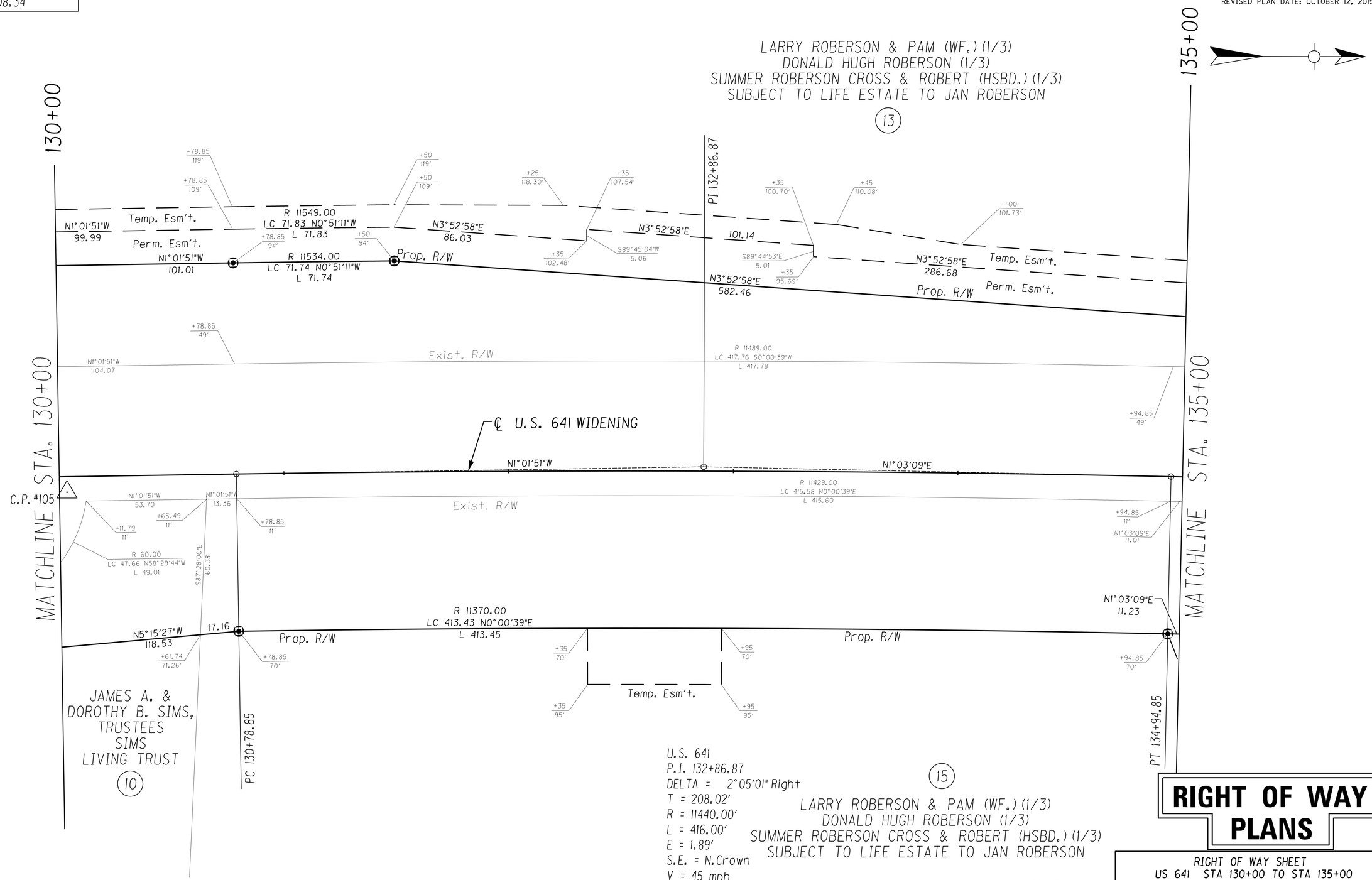

U.S. 641
P.I. 132+86.87
DELTA = 2°05'01" Right
T = 208.02'
R = 11440.00'
L = 416.00'
E = 1.89'
S.E. = N.Crown
V = 45 mph

SCALE: 1"=

RIGHT OF WAY PLANS

RIGHT OF WAY SHEET
US 641 STA 130+00 TO STA 135+00
SCALE 1" = 20'

FILE NAME: H:\01037 US641 CALLOWAY\11-09_LEXINGTON\01037\ROW PLANS 9-7-07\R19 13000-13500RW.DGN
USER: wiwright
DATE PLOTTED: August 18, 2015
E-SHEET NAME:
MicroStation v8.11.7.529

COUNTY OF	ITEM NO.	SHEET NO.
CALLOWAY	1-314.10	R20

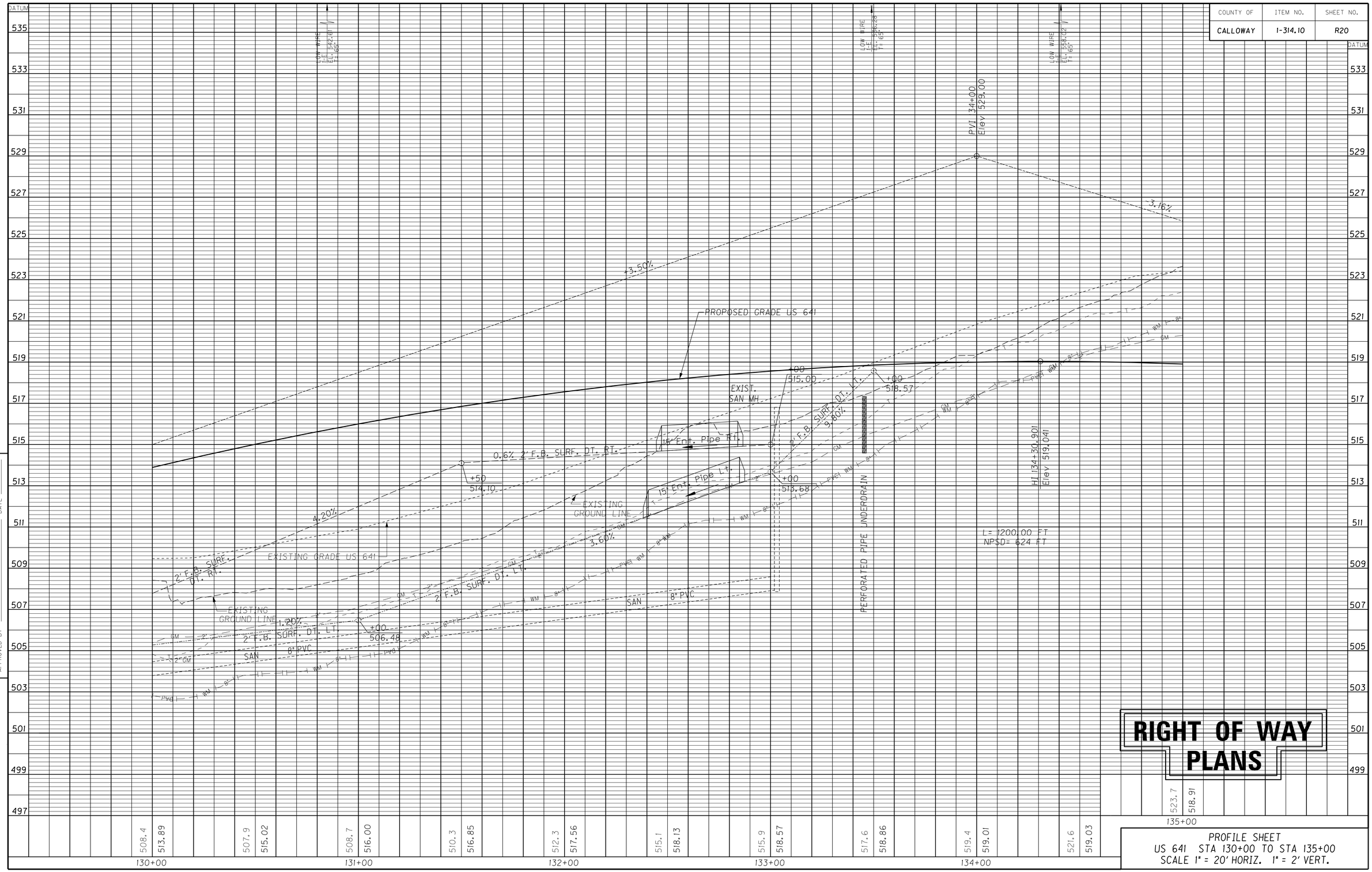

RIGHT OF WAY PLANS

PROFILE SHEET
US 641 STA 130+00 TO STA 135+00
SCALE 1" = 20' HORIZ. 1" = 2' VERT.

PREPARED BY _____ DATE _____
CHECKED BY _____ DATE _____
APPROVED BY _____

Cell Library: kytc.cel
Cell Name: sp f
DD-MMM-YYYY HH:MM

COUNTY OF	ITEM NO.	SHEET NO.
CALLOWAY	1-314.10	R21

REVISED PLANS DATE: NOVEMBER 18, 2016

Control Point #104
E 887316.1905
N 1744067.9600
El. 523.20

LT. 135+86 US 641 CONST. 12' ENTRANCE
W/ 81 S.Y. OF DENSE GRADED AGGREGATE
60 S.Y. OF CL2 ASPHALT BASE AND
59 S.Y. OF CL2 ASPHALT SURFACE AND
20 S.Y. OF CEM. CONC. ENT. PAVEMENT 8-INCH.

LT. 137+00 US 641 CONST. 12' ENTRANCE
W/ 20 S.Y. OF DENSE GRADED AGGREGATE
AND 20 S.Y. OF CEM. CONC. ENT. PAVEMENT
8-INCH.

LT. 138+19 US 641 CONST. 12' ENTRANCE
W/ 67 S.Y. OF DENSE GRADED AGGREGATE
46 S.Y. OF CL2 ASPHALT BASE AND
45 S.Y. OF CL2 ASPHALT SURFACE AND
20 S.Y. OF CEM. CONC. ENT. PAVEMENT 8-INCH.

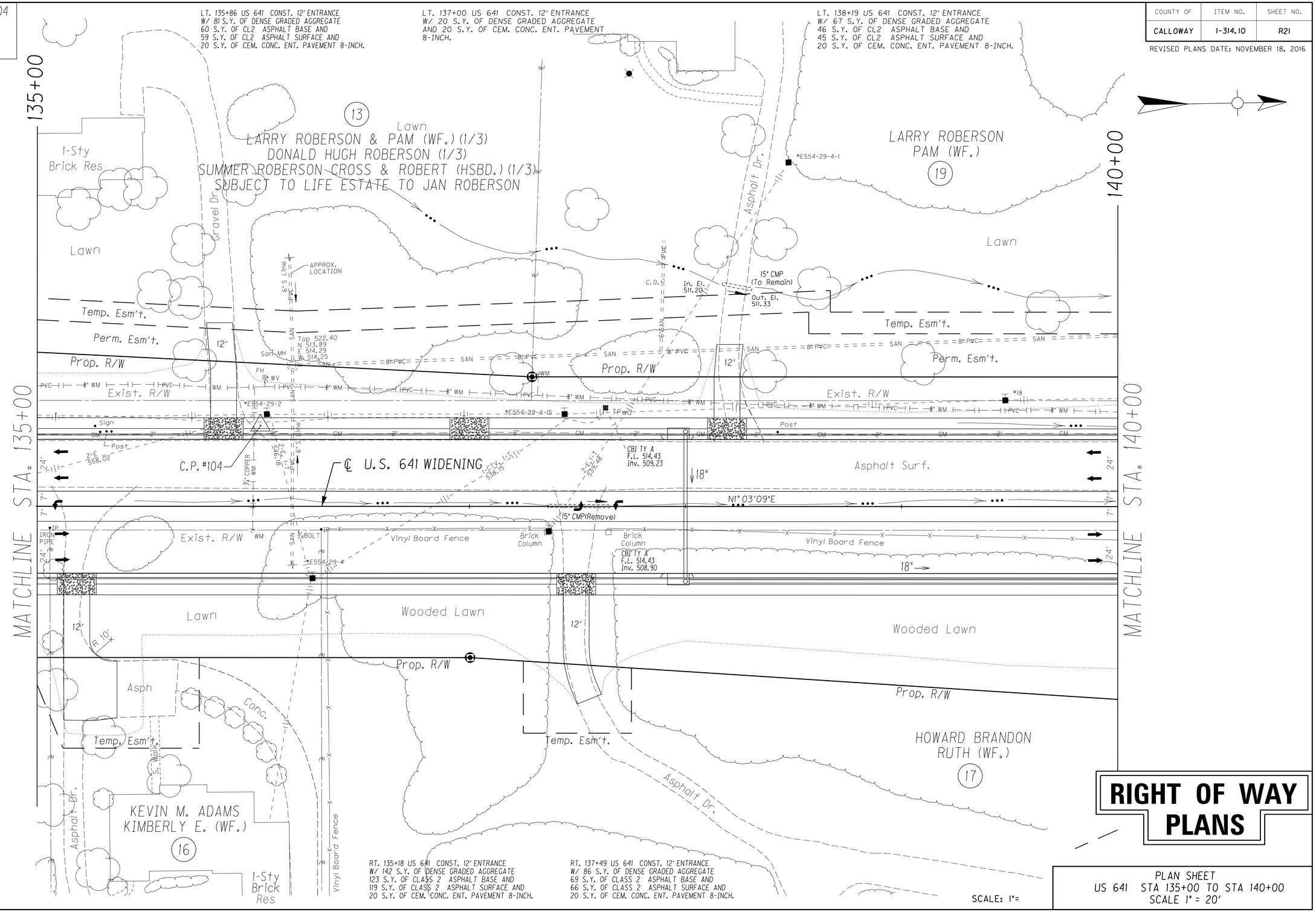

RT. 135+18 US 641 CONST. 12' ENTRANCE
W/ 142 S.Y. OF DENSE GRADED AGGREGATE
123 S.Y. OF CLASS 2 ASPHALT BASE AND
119 S.Y. OF CLASS 2 ASPHALT SURFACE AND
20 S.Y. OF CEM. CONC. ENT. PAVEMENT 8-INCH.

RT. 137+49 US 641 CONST. 12' ENTRANCE
W/ 86 S.Y. OF DENSE GRADED AGGREGATE
69 S.Y. OF CLASS 2 ASPHALT BASE AND
66 S.Y. OF CLASS 2 ASPHALT SURFACE AND
20 S.Y. OF CEM. CONC. ENT. PAVEMENT 8-INCH.

SCALE: 1"=

RIGHT OF WAY PLANS

PLAN SHEET
US 641 STA 135+00 TO STA 140+00
SCALE 1" = 20'

FILE NAME: H:\0\037 US641 CALLOWAY\11-09_LEXINGTON\0\037\ROW PLANS 9-7-07\R21\3500-14000.DGN
USER: fhoover
DATE PLOTTED: November 18, 2016
E-SHEET NAME:
MicroStation v8.11.7.529

COUNTY OF	ITEM NO.	SHEET NO.
CALLOWAY	1-314.10	R22

REVISED PLAN DATE: MAY 15, 2017

Control Point #104
E 887316.1905
N 1744067.9600
El. 523.20

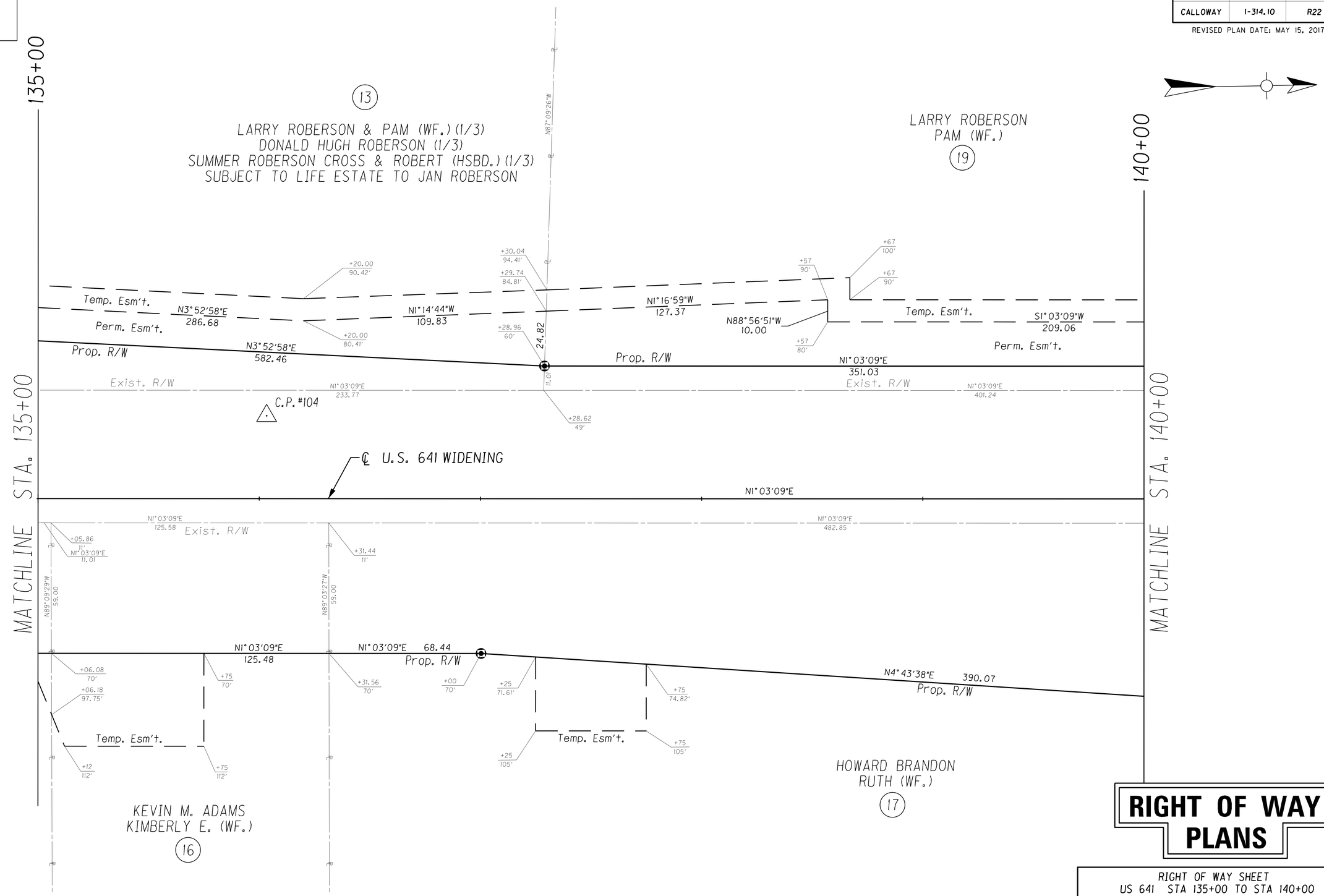

RIGHT OF WAY PLANS

RIGHT OF WAY SHEET
US 641 STA 135+00 TO STA 140+00
SCALE 1" = 20'

SCALE: 1"=

FILE NAME: H:\01037 US641 CALLOWAY\11-09_LEXINGTON\01037\ROW PLANS 9-7-07\R22 13500-14000RW.DGN
USER: wiwright
DATE PLOTTED: May 12, 2017
E-SHEET NAME:
MicroStation v8.11.7.529

COUNTY OF	ITEM NO.	SHEET NO.
CALLOWAY	I-314.10	R23

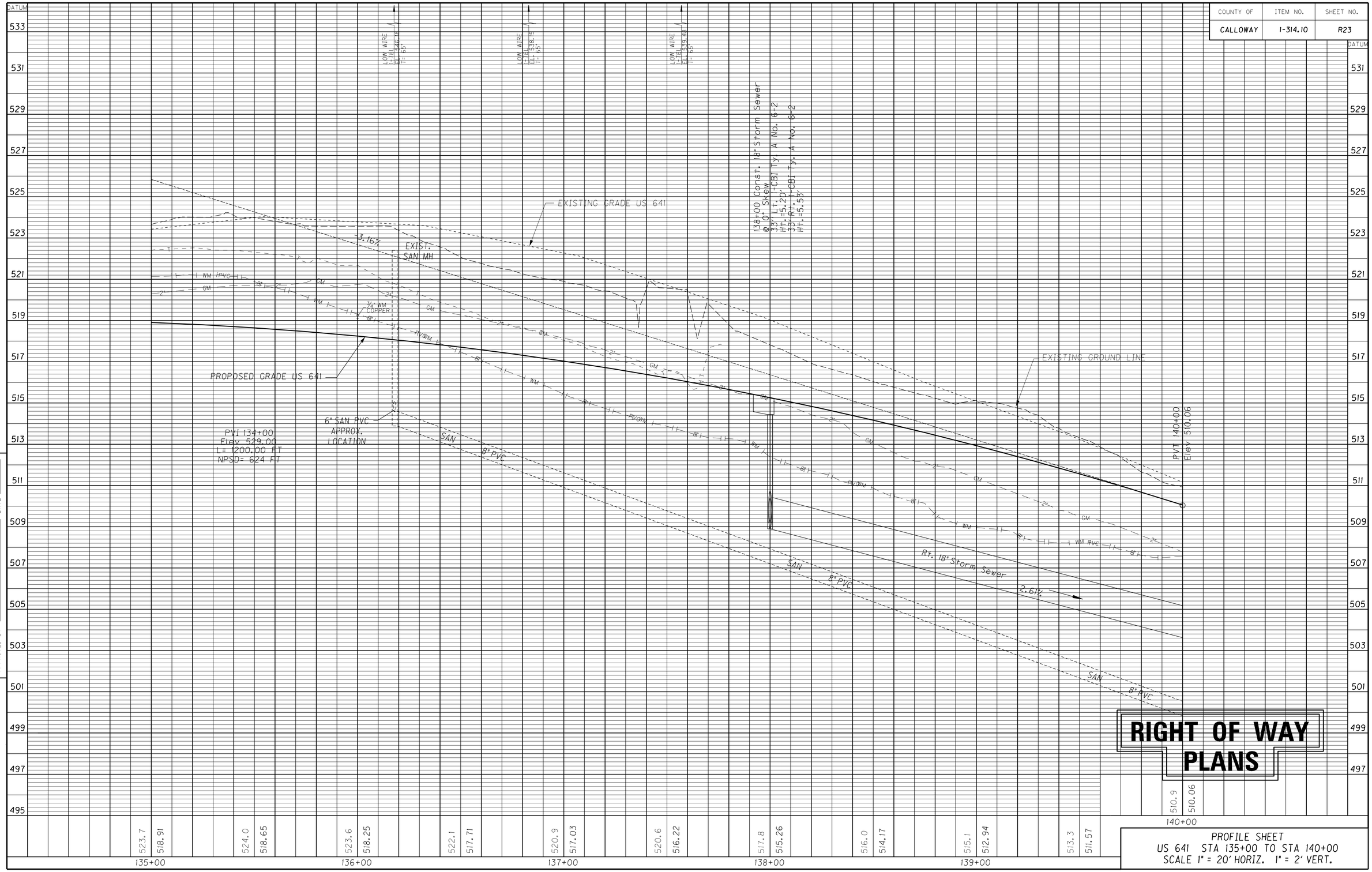

RIGHT OF WAY PLANS

PROFILE SHEET
US 641 STA 135+00 TO STA 140+00
SCALE 1" = 20' HORIZ. 1" = 2' VERT.

PREPARED BY _____ DATE _____
CHECKED BY _____ DATE _____
APPROVED BY _____

Cell Library: kytc.cel
Cell Name: spf
DD-MMM-YYYY HH:MM

COUNTY OF CALLOWAY
ITEM NO. I-314.10
SHEET NO. R24
REVISED PLANS DATE: APRIL 17, 2018
Control Point #102
E 887372.1854
N 1744723.3167
El. 498.50
GPS Mon #01 12 02
E 887309.5300
N 1744833.9800
El. 496.35
LT. 140+40 US 641 CONST. 12' ENTRANCE
W/ 20 S.Y. OF DENSE GRADED AGGREGATE
AND 20 S.Y. OF CEM. CONC. ENT. PAVEMENT
8-INCH
LARRY ROBERSON
PAM (WF.)
19
140+00
141+34.85 U.S. 641 =
10+00 PEGGY ANN DRIVE
10+00 FUTURE CITY ST.
PEGGY ANN DRIVE
P.I. 8+80.00
DELTA = 2°00'38" Left
T = 70.19'
R = 4000.00'
L = 140.37'
E = 0.62'
S.E. = N. Crown
PC 8+09.80
PT 9+50.17
V = 30 mph
1½-Sty Metal Bus
Floor Elev. 498.32
KEITH & HAZEL BRANDON
FAMILY LIMITED PARTNERSHIP
26
145+00
Trees
SCARIFY AND SEED
REMOVE 36 SY OF
ASPHALT PAVEMENT
ROLL-UP
O.H. DOOR
GPS Mon #01 12 02
Temp. Esm't.
Perm. Esm't.
Prop. R/W
Exist. R/W
Backfill
Existing
Ditch
Asphalt Parking
Const. Prop. Asphalt Surface (Provide Positive
Drainage Away From Gravity Wall @ 10:1 Min. Slope)
Retaining Wall-Gravity Type
W/250' of Handrail Type A-1
Prop. 8' Asphalt Surface
DBI TY 11
T.G. 495.00
Inv. 490.15
San MH
Top 494.92
N 488.34
S 488.38
San MH
Top 506.80
N 499.50
S 499.71
F.L. 499.00
F.L. 496.00
24" RCP
(Remove)
45 mph Sign
CBI TY A
F.L. 506.59
Inv. 501.39
4" Perf. Pipe
HW 499.87
Existing 4' x 3'
RCBC (Remove)
℄ U.S. 641 WIDENING
CBI TY A
F.L. 496.70
Inv. 489.99
Asphalt Surf.
MATCHLINE STA. 140+00
MATCHLINE STA. 145+00
15" RCP (Remove)
N1°03'09"E
Temp. Pipe (Future Safeload)
C.P. #102
NO°14'52"E
MH TY C
Top. 505.80
Inv. 495.50
45 mph Sign
15" CMP
CBI TY A
F.L. 507.46
Inv. 502.18
CBI TY A
F.L. 501.77
Inv. 496.57
Sign(Remove)
CBI TY A
F.L. 496.70
Inv. 491.49
U.S. 641
P.I. 142+71.53
DELTA = 0°48'18" Left
T = 70.24'
R = 10000.00'
Lc = 140.48'
E = 0.25'
Se = N.C.
P.C. 142+01.29
P.T. 143+41.77
V = 45 mph
MH TY C
Top. 504.87
Inv. 495.18
30" RCP (Safeload)
Retaining Wall-Gravity Type
W/152' of Handrail Type A-1
Wooded Lawn
30" RCP (Remove)
F.L. 495.00
Const. Prop. Asphalt Surface
(Provide Positive Drainage Away
From Gravity Wall @ 10:1 Min. Slope)
Plug Existing Pipe
Asphalt Parking
PI 11+06.48
HOWARD
BRANDON
RUTH (WF.)
17
Vinyl Board Fence
Asph. Dr.
S88°55'33"E
TAYLOR AND TAYLOR, INC.
25
Open Field
C-Link Fence
24" RCP
Str In
Top 492.84
Inv. 489.70
12" 491.11
12" CMP
In. El. 490.60
Floor Elev. 493.24
TAYLOR AND TAYLOR, INC.
27
RT. 141+25 US 641 CONST. 14' ENTRANCE
W/ 118 S.Y. OF DENSE GRADED AGGREGATE
93 S.Y. OF CL2 ASPHALT BASE AND
92 S.Y. OF CL2 ASPHALT SURFACE AND
22 S.Y. OF CEM. CONC. ENT. PAVEMENT 8-INCH.
SCALE: 1"=
RIGHT OF WAY
PLANS
PLAN SHEET
US 641 STA 140+00 TO STA 145+00
SCALE 1" = 20'
FILE NAME: H:\01037 US641 CALLOWAY\11-09_LEXINGTON\01037\ROW PLANS 9-7-07\R24 14000-14500.DGN
USER: FHOOVER
DATE PLOTTED: April 17, 2018
E-SHEET NAME:
MicroStation v8.11.7.529

COUNTY OF	ITEM NO.	SHEET NO.
CALLOWAY	1-314.10	R25

REVISED PLANS DATE: APRIL 17, 2018

Control Point #102
E 887372.1854
N 1744723.3167
El. 498.50

GPS Mon #01 12 02
E 887309.5300
N 1744833.9800
El. 496.35

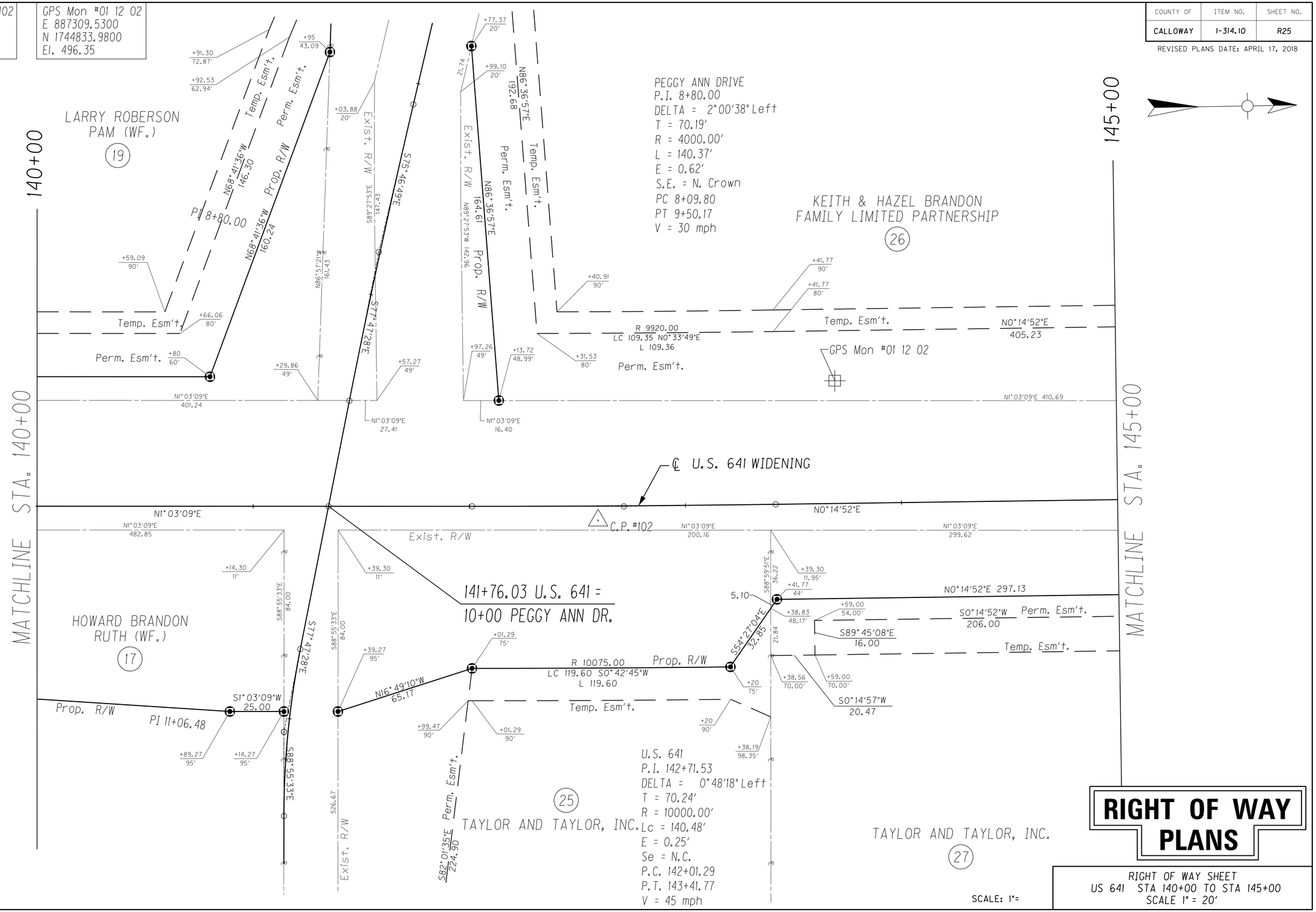

RIGHT OF WAY PLANS

RIGHT OF WAY SHEET
US 641 STA 140+00 TO STA 145+00
SCALE 1" = 20'

SCALE: 1"=

FILE NAME: H:\01037 US641 CALLOWAY\H-09_LEXINGTON\01037\ROW PLANS 9-7-07\R25 14000-14500RW.DGN
USER: FHOOVER
DATE PLOTTED: April 17, 2018
E-SHEET NAME:
MicroStation v8.11.7.529

COUNTY OF	ITEM NO.	SHEET NO.
CALLOWAY	1-314.10	R26

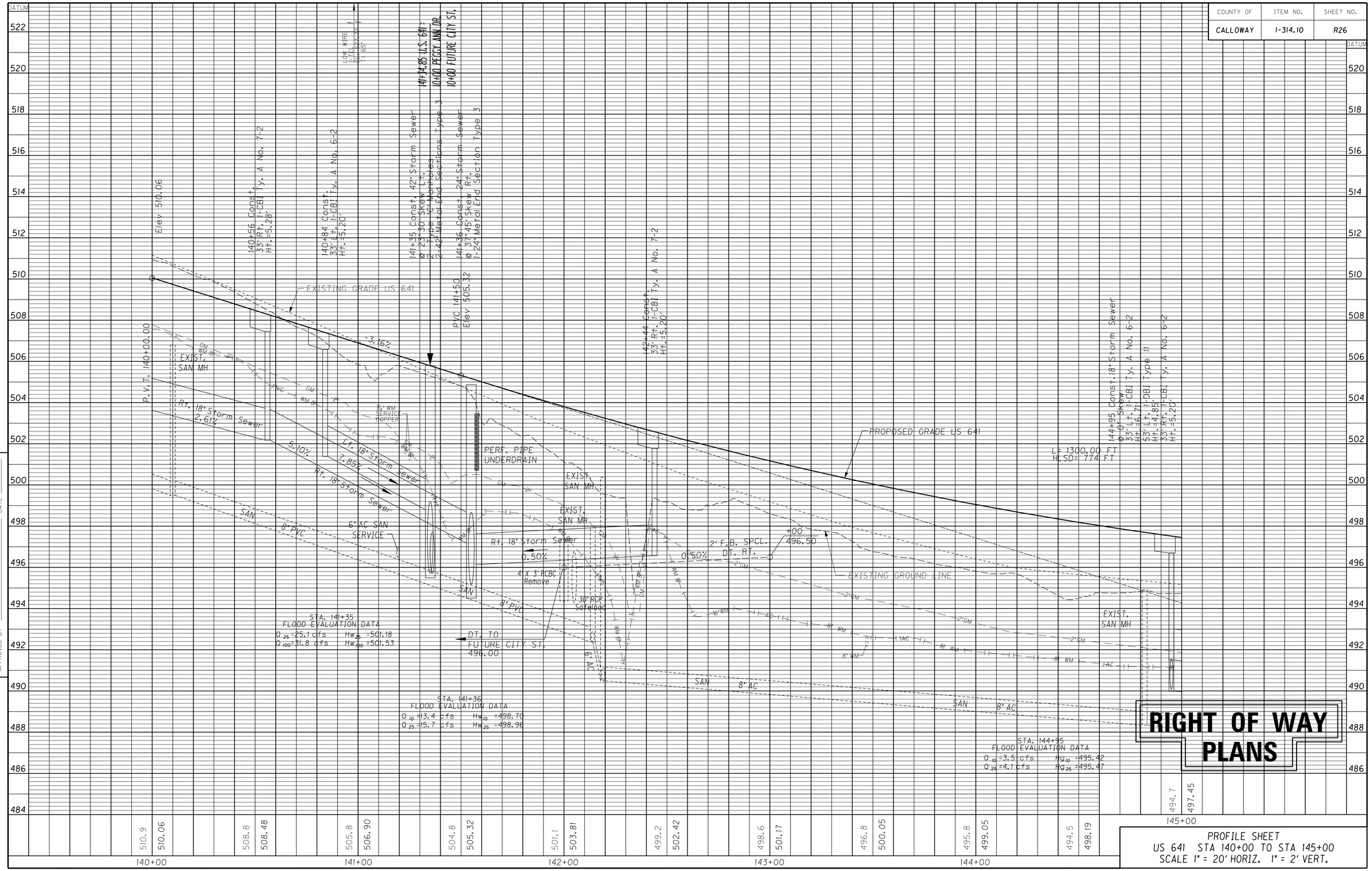

RIGHT OF WAY PLANS

PROFILE SHEET
US 641 STA 140+00 TO STA 145+00
SCALE 1" = 20' HORIZ. 1" = 2' VERT.

PREPARED BY _____ DATE _____
CHECKED BY _____ DATE _____
APPROVED BY _____

Cell Library: kytc.cel
Cell Name: sp-f
DD-MMM-YYYY HH:MM

COUNTY OF	ITEM NO.	SHEET NO.
CALLOWAY	1-314.10	R27

REVISED PLAN DATE: SEPTEMBER 8, 2017

Control Point #115
E 887307.9293
N 1745259.7560
El. 495.26

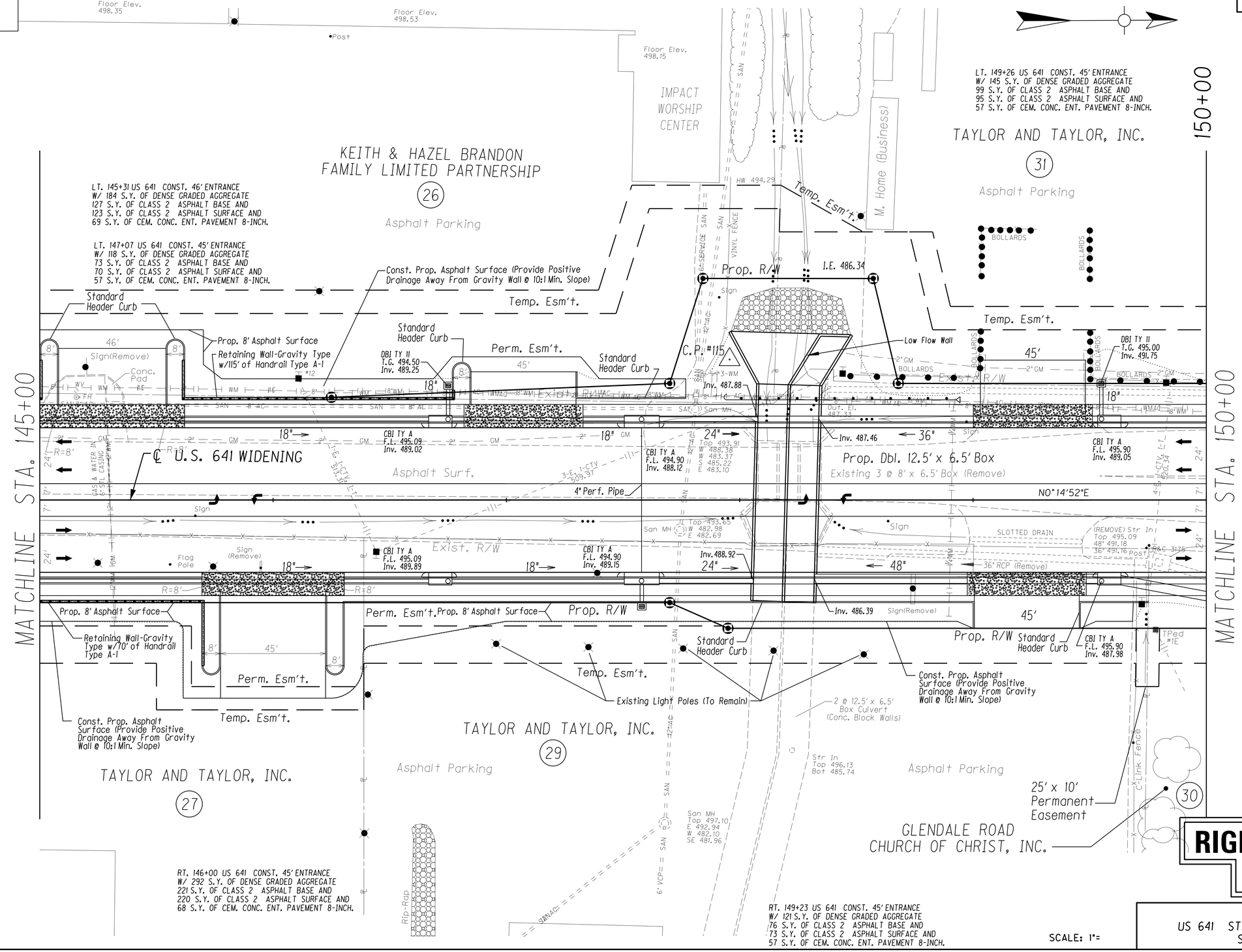

RIGHT OF WAY PLANS

PLAN SHEET
US 641 STA 145+00 TO STA 150+00
SCALE 1" = 20'

SCALE: 1"=

FILE NAME: H:\01037 US641 CALLOWAY\11-09_LEXINGTON\01037\ROW PLANS 9-7-07\R27 14500-15000.DGN
USER: wiwright
DATE PLOTTED: September 7, 2017
E-SHEET NAME:
MicroStation v8.11.9.832

Control Point #115
E 887307.9293
N 1745259.7560
El. 495.26

COUNTY OF	ITEM NO.	SHEET NO.
CALLOWAY	1-314.10	R28

REVISED PLAN DATE: SEPTEMBER 8, 2017

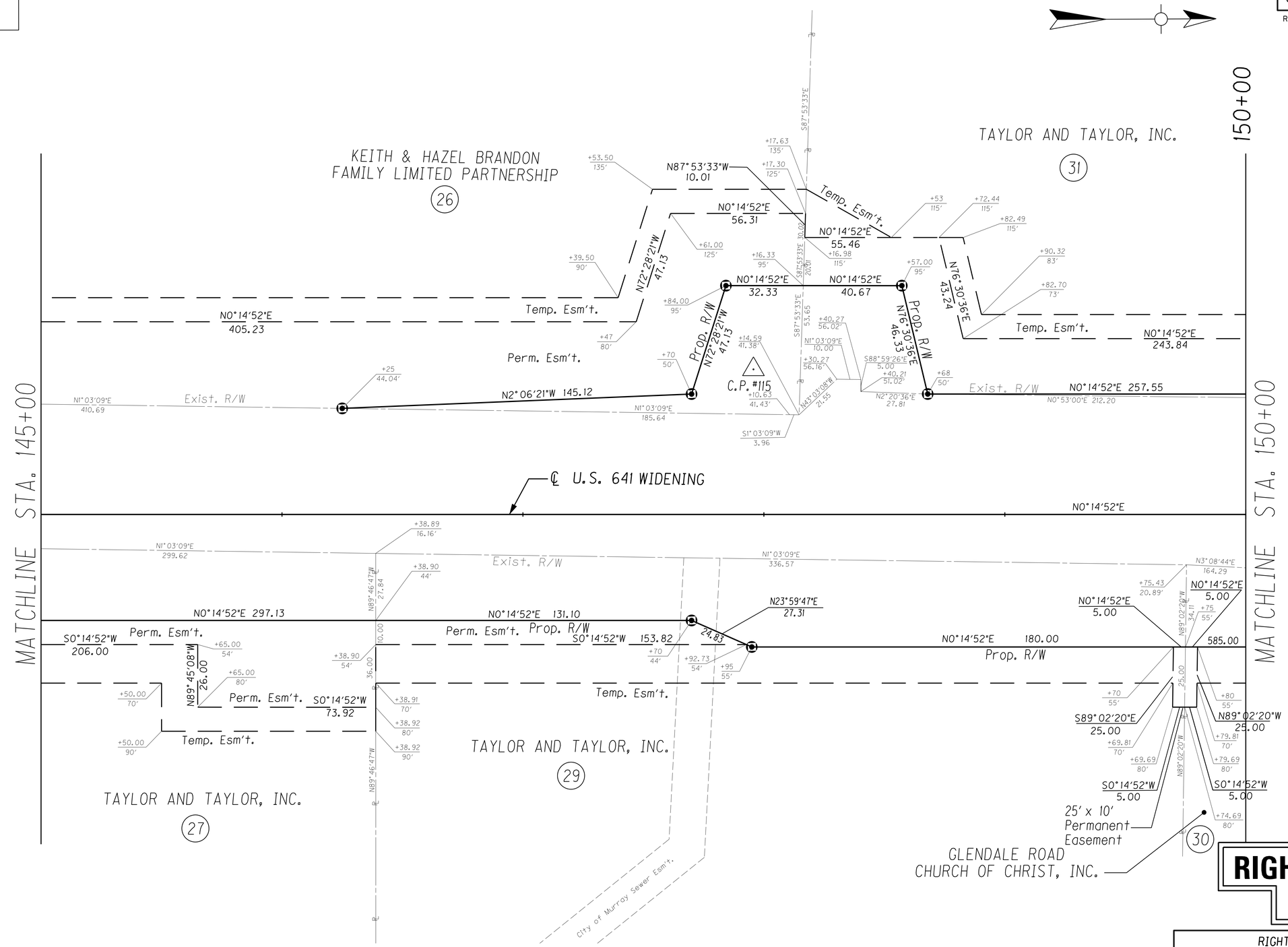

RIGHT OF WAY PLANS

RIGHT OF WAY SHEET
US 641 STA 145+00 TO STA 150+00
SCALE 1" = 20'

SCALE: 1"=

FILE NAME: H:\0037 US641 CALLOWAY\11-09_LEXINGTON\0037\ROW PLANS 9-7-07\R28 14500-15000RW.DGN
USER: wlwright
DATE PLOTTED: September 7, 2017
E-SHEET NAME:
MicroStation v8.11.9.832

COUNTY OF	ITEM NO.	SHEET NO.
CALLOWAY	1-314.10	R29

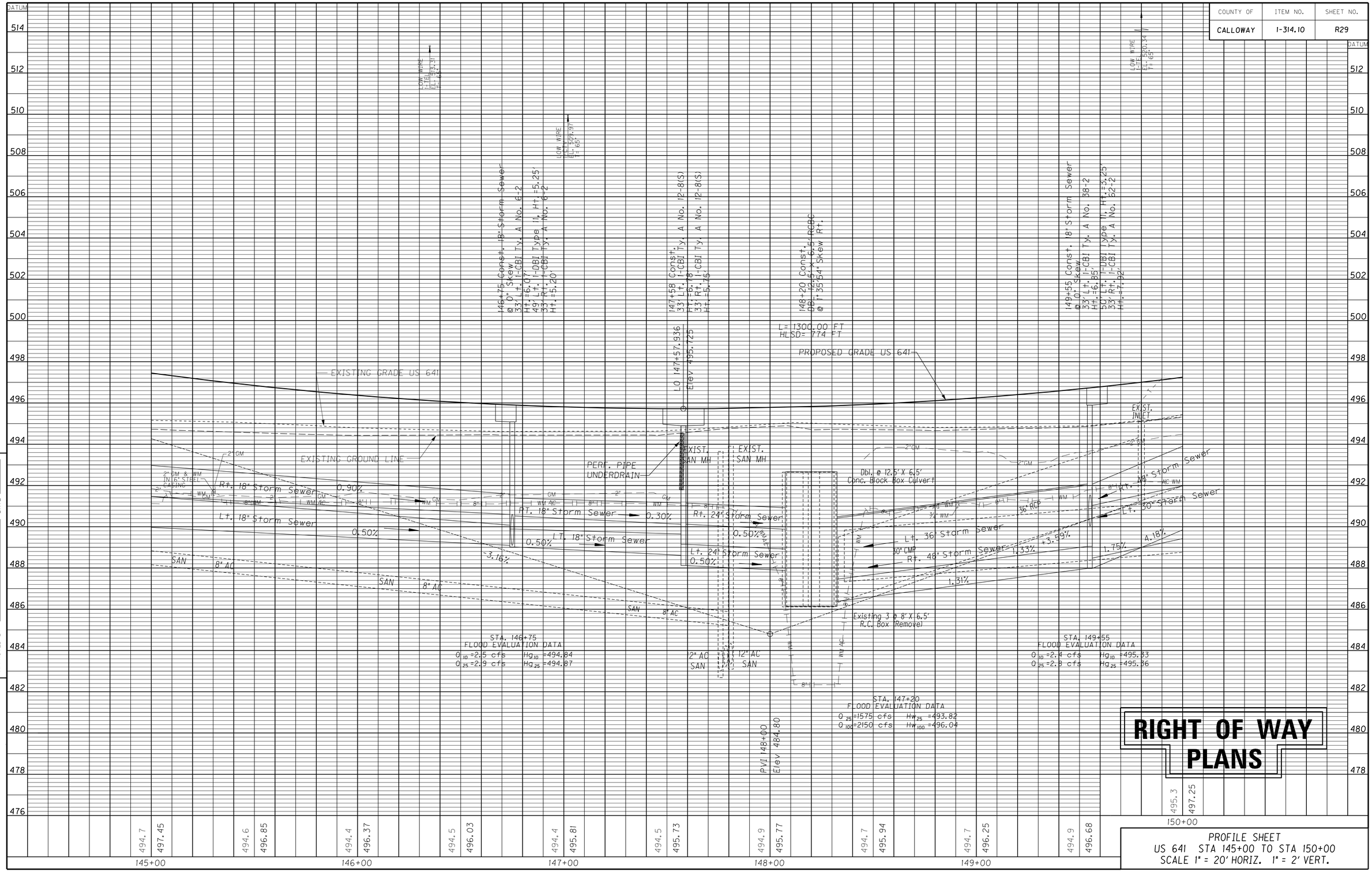

PREPARED BY _____ DATE _____
CHECKED BY _____ DATE _____
APPROVED BY _____

Cell Library: kytc.cel
Cell Names: sp
DD-MMM-YYYY HH:MM

COUNTY OF	ITEM NO.	SHEET NO.
CALLOWAY	1-314.10	R30

REVISED PLAN DATE: AUGUST 18, 2015

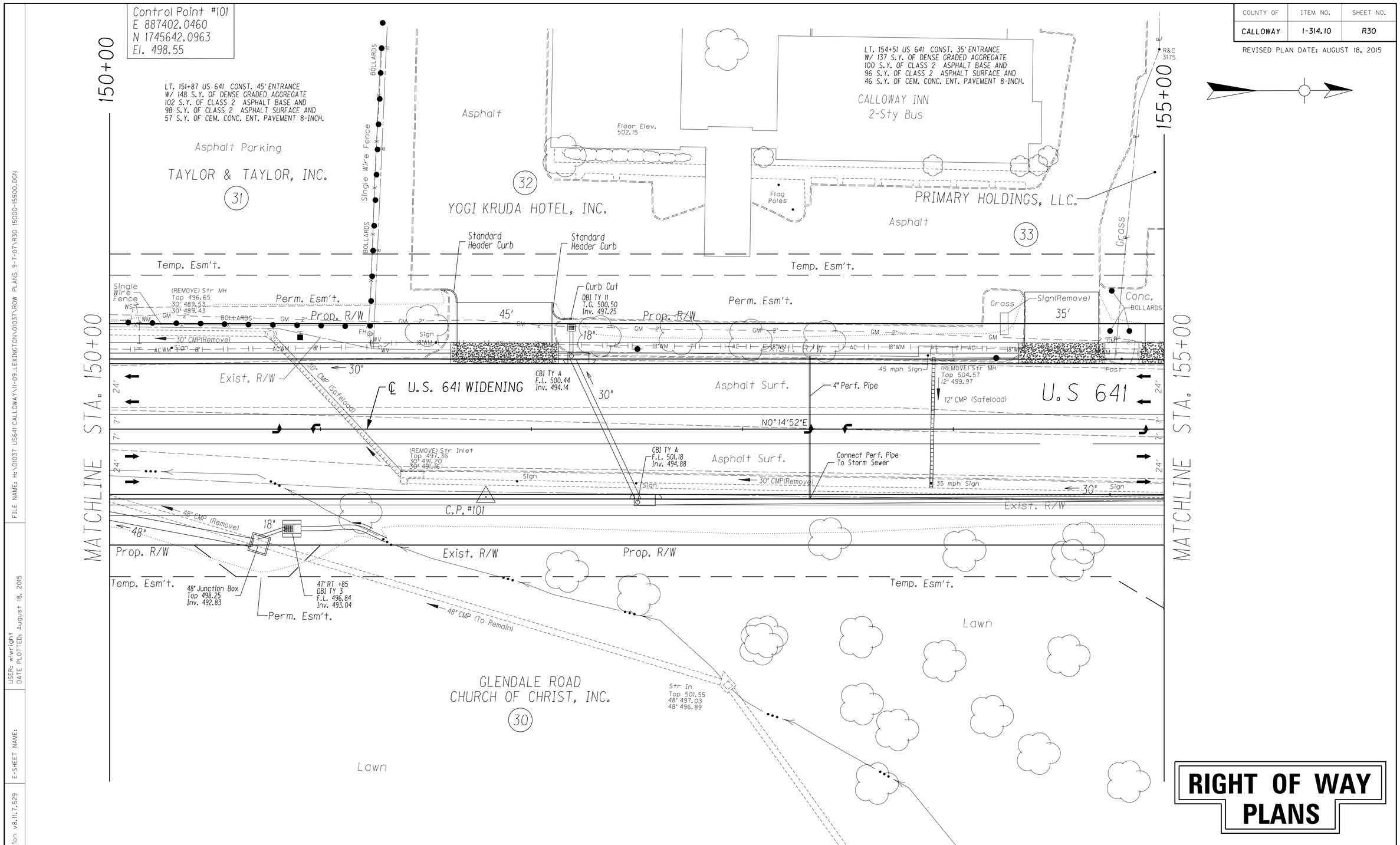

RIGHT OF WAY PLANS

SCALE: 1"=

PLAN SHEET
US 641 STA 150+00 TO STA 155+00
SCALE 1" = 20'

FILE NAME: H:\01037 US641 CALLOWAY\H-09_LEXINGTON\01037\ROW PLANS 9-7-07\R30 15000-15500.DGN

USER: wlwright
DATE PLOTTED: August 18, 2015

E-SHEET NAME:

MicroStation v8.11.7.529

COUNTY OF	ITEM NO.	SHEET NO.
CALLOWAY	1-314.10	R31

REVISED PLAN DATE: AUGUST 18, 2015

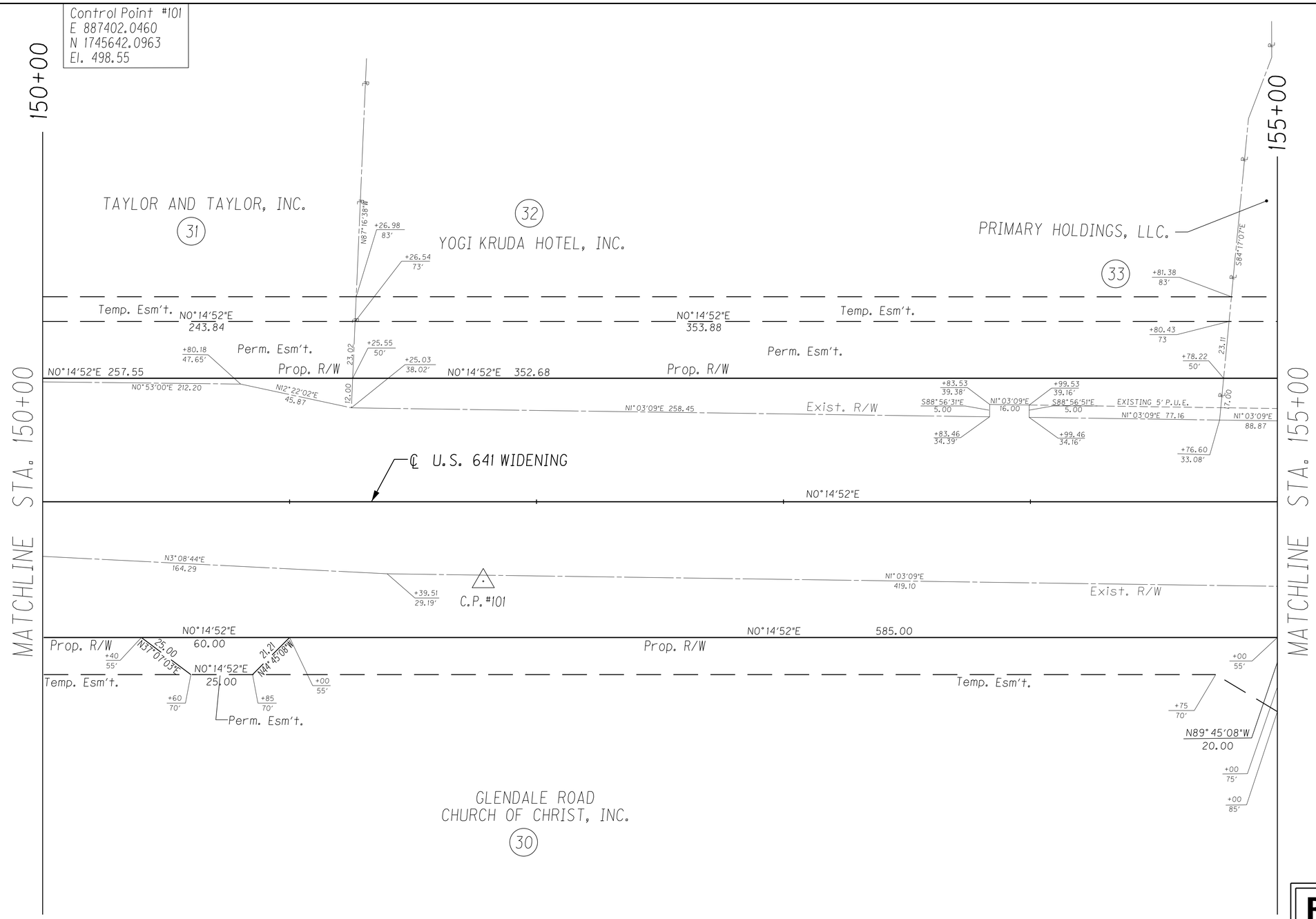

RIGHT OF WAY PLANS

RIGHT OF WAY SHEET
US 641 STA 150+00 TO STA 155+00
SCALE 1" = 20'

FILE NAME: H:\01037 US641 CALLOWAY\11-09_LEXINGTON\01037\ROW PLANS 9-7-07\R31 15000-15500RW.DGN

USER: wiwright
DATE PLOTTED: August 18, 2015

E-SHEET NAME:

MicroStation v8.11.7.529

COUNTY OF	ITEM NO.	SHEET NO.
CALLOWAY	1-314.10	R32

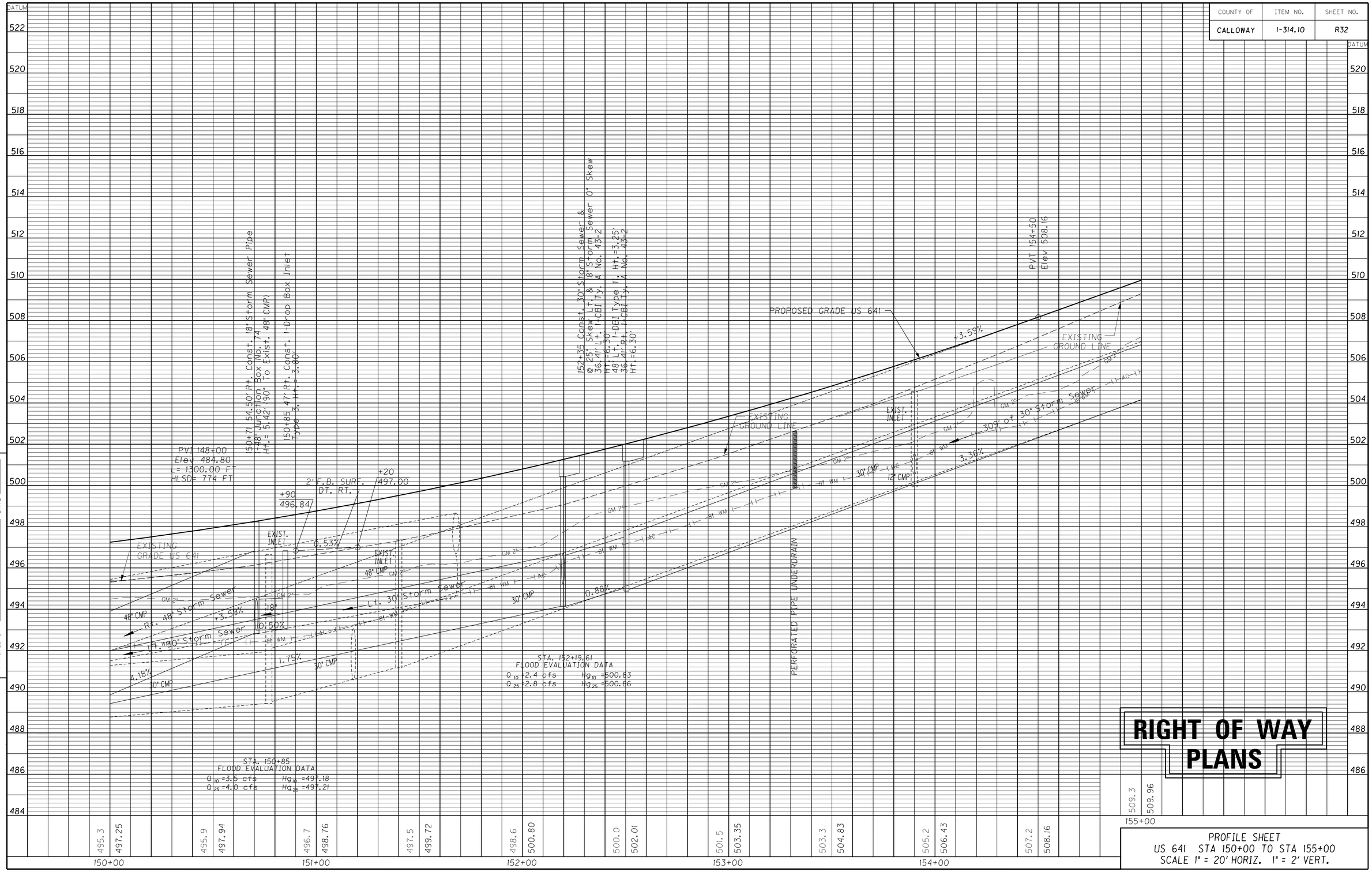

RIGHT OF WAY PLANS

PROFILE SHEET
US 641 STA 150+00 TO STA 155+00
SCALE 1" = 20' HORIZ. 1" = 2' VERT.

PREPARED BY _____ DATE _____
CHECKED BY _____ DATE _____
APPROVED BY _____

Cell Library: kytc.cel
Cell Name: sp1
DD-MMM-YYYY HH:MM

COUNTY OF	ITEM NO.	SHEET NO.
CALLOWAY	1-314.10	R33

REVISED PLAN DATE: OCTOBER 12, 2015

GPS Mon #01 12 01
E 887304.7000
N 1746118.7600
El. 514.57

LT. 155+05 US 641 CONST. 28' ENTRANCE
W/ 61 S.Y. OF DENSE GRADED AGGREGATE
31 S.Y. OF CLASS 2 ASPHALT BASE AND
30 S.Y. OF CLASS 2 ASPHALT SURFACE AND
38 S.Y. OF CEM. CONC. ENT. PAVEMENT 8-INCH.

LT. 155+49 US 641 CONST. 28' ENTRANCE
W/ 60 S.Y. OF DENSE GRADED AGGREGATE
30 S.Y. OF CLASS 2 ASPHALT BASE AND
29 S.Y. OF CLASS 2 ASPHALT SURFACE AND
39 S.Y. OF CEM. CONC. ENT. PAVEMENT 8-INCH.

156+31.11 U.S. 641 =
10+00 GLENDALE ROAD WEST

STA. 159+20
END RIGHT OF WAY

PRIMARY HOLDINGS, LLC.
(33)

PRIMARY HOLDINGS, LLC.
(34)

MATCHLINE STA. 155+00

℄ U.S. 641
WIDENING

N0°14'52"E

N1°51'27"E

U.S 641 To Benton →

To Ky 121 ↓

S88°08'33"E

STA. 156+45
END CONST.

156+23.23 U.S. 641 =
10+00 GLENDALE ROAD EAST

GLENDALE ROAD
CHURCH OF CHRIST, INC.
(30)

END CONST. @ 11+27.08

APPROXIMATE LIMITS OF ASPHALT PAVEMENT MILLING AND TEXTURING

BM # 901
RR SPIKE IN COMB POLE #1K256M AT THE NE
CORNER OF GLENDALE AND WHITNELL.

RIGHT OF WAY PLANS

PLAN SHEET
US 641 STA 155+00 TO END OF PROJECT
SCALE 1" = 20'

FILE NAME: H:\01037 US641 CALLOWAY\11-09_LEXINGTON\01037\ROW PLANS 9-7-07\R33 15500-END.DGN
USER: wlwright
DATE PLOTTED: August 18, 2015
E-SHEET NAME:
MicroStation v8.11.7.529

GPS Mon #01 12 01
E 887304.7000
N 1746118.7600
El. 514.57

COUNTY OF	ITEM NO.	SHEET NO.
CALLOWAY	1-314.10	R34

REVISED PLAN DATE: OCTOBER 12, 2015

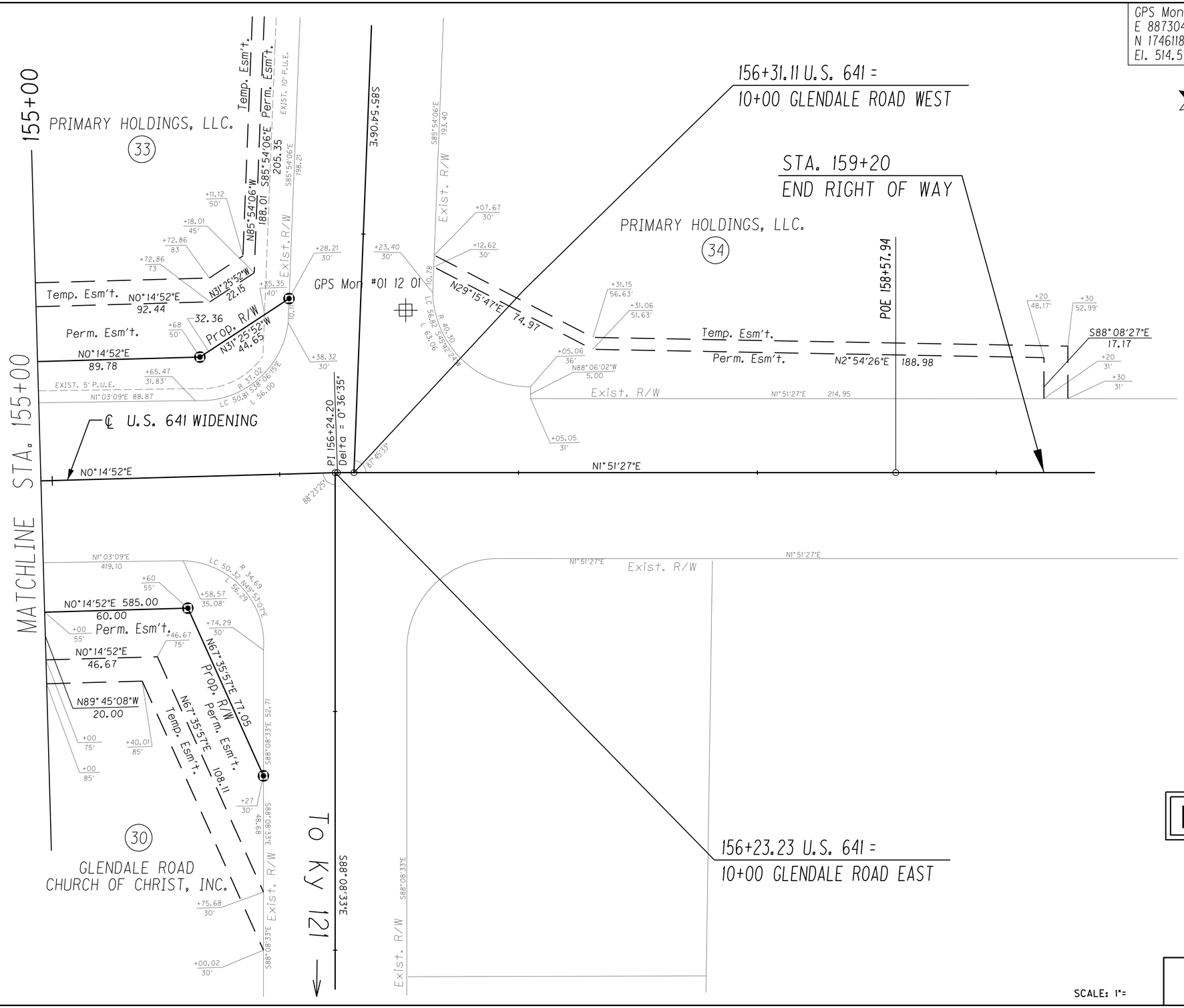

RIGHT OF WAY PLANS

SCALE: 1"=

RIGHT OF WAY SHEET
US 641 STA 155+00 TO END OF PROJECT
SCALE 1" = 20'

MicroStation v8.11.7.529 | E-SHEET NAME: | USER: wiwright DATE PLOTTED: August 18, 2015 | FILE NAME: H:\01037 US641 CALLOWAY\11-09_LEXINGTON\01037\ROW PLANS 9-7-07\R34 15500-ENDRW.DGN

COUNTY OF	ITEM NO.	SHEET NO.
CALLOWAY	1-314.10	R35

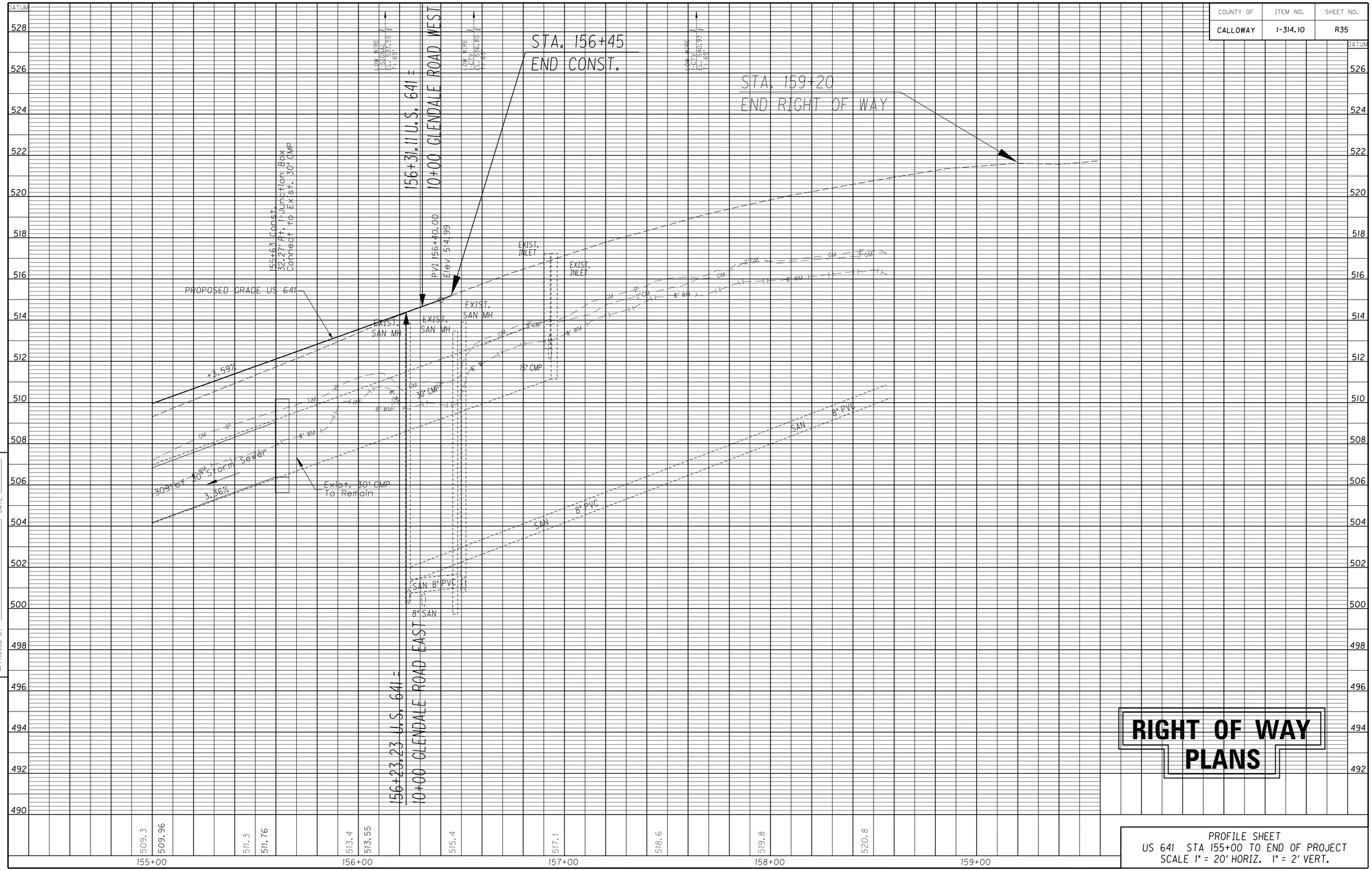

PREPARED BY _____ DATE _____
CHECKED BY _____ DATE _____
APPROVED BY _____

Cell Library: kytc.cel
Cell Name: sp1
DD-MMM-YYYY HH:MM

RIGHT OF WAY PLANS

PROFILE SHEET
US 641 STA 155+00 TO END OF PROJECT
SCALE 1" = 20' HORIZ. 1" = 2' VERT.

COUNTY OF	ITEM NO.	SHEET NO.
CALLOWAY	1-314.10	R36

REVISED PLANS DATE: JANUARY 4, 2017

Control Point #109
E 886970.1452
N 1742327.4842
El. 487.33

THE CLARA WALDROP HUMPHREY REVOCABLE TRUST
3
Uncultivated

Cultivated

FUTURE U.S. 641
P.I. 116+54.10
DELTA = 1°22'00" Right
T = 143.13'
R = 12000.00'
Lc = 286.25'
E = 0.85'
Se = N.C.

118+47.88 U.S. 641 =
10+00 TABARD DRIVE

HOWARD BRANDON RUTH (WF.)
4

Future US 641 PT 117+97.22 =
Temp Tie To US 641 20+97.36

End Taper
20+86.37 Temp Tie To U.S. 641 =
117+86.30 U.S. 641 Ahead

TABARD DRIVE
Asphalt Surf.

C.P. #109

Exist. R/W
Exist. Asphalt Header Curb
Exist. Conc. Header Curb
N89° 32'17"E
Const. Mountable Median Type I
S88°04'04"W
S89°57'12"E
VINYL FENCE
Temp. Esm't.
Perm. Esm't.
Prop. R/W
Limits
Exist. R/W/N1°01'51"W
N1°01'51"W
Murray Corp.
36" EQUIV.
18" EQUIV.
42" EQUIV.
Brick Wall
SPOT LIGHT
18" CMP Remove
Asphalt Surf.
℄ U.S. 641 WIDENING
Prop. R/W
582.78
832.27
N3°59'33"W
75' STORAGE
Exist. R/W
R20'
R30'
R 85'
O.E. 476.72
O.E. 475.79
I.E. 476.33
CBI TY A F.L. 483.89 Inv. 476.89
CBI TY A F.L. 483.68 Inv. 478.26
CBI TY A T.C. 482.52 Inv. 476.17
CBI TY A T.C. 482.54 Inv. 475.88
CBI TY A F.L. 483.66 Inv. 478.37
76' Lt. 117+86.30
75.39' Lt. 40.00' 37
62.4' Rt. 9424.62
Sign
Fred
GM
WM
T
E
2"
8"
12'
7'
6'
24'
28'
90°34'08"
CLARA W. HUMPHREY
2
Uncultivated

BEGIN CONST. @ 8+88

+98.08 109'
+97.92 119'
+98.33 94'
+97.22 100'
+24.81 138.51'
+24.62 128.51'
+24.34 113.51'
+23.97 94'
+97.22 138.51'
+97.22 128.51'
+97.22 113.51'
15.100
15.00
27.40
27.12
19.52
357.04

TABARD DRIVE
SCALE: 1" = 20'

DATUM
492
490
488
486
484
482
480
478
476

EXISTING GRADE TABARD DR.
PVI 8+88.00 Elev 483.35
PVC 9+00.00 Elev 483.19
9+19 Const. 36" Equiv. Storm Sewer @ 0° Skew 20.4' Lt. 1-CBI Ty. A 62-6(S) HI=6.95' 19.4' Rt. 1-CBI Ty. A 62-6(S) HI=6.66' 2-36" Equiv. Metal End Sections
PVT 9+40.00 Elev 483.21
PVI 9+67.00 Elev 483.59
PVI 10+00.00 Elev 484.25
US 641
PVI 9+20.00 Elev 482.93
L = 40.00'
HLSD = 262.95'
-1.32%
+1.40%
+2.00%
PROPOSED GRADE
ELEC.
UT
8" WM APPROX. LOCATION
18" CMP
486.4
485.4
484.7
484.0
483.1 483.19
483.1 483.35
481.0 484.25
7+00
8+00
9+00
10+00

STA. 9+19
FLOOD EVALUATION DATA
Q_{25} = 230 cfs Hw_{25} = 478.20
Q_{100} = 289 cfs Hw_{100} = 478.51

RIGHT OF WAY PLANS

SCALE: 1" = 20' HORIZONTAL
1" = 2' VERTICAL

PLAN & PROFILE SHEET
TABARD DRIVE
SCALE 1" = 20' HORIZ. 1" = 2' VERT.

FILE NAME: H:\01037 US641 CALLOWAY\11-09_LEXINGTON\01037\ROW PLANS 9-7-07\R36 TABARD.DGN
USER: fhoover
DATE PLOTTED: January 4, 2017
E-SHEET NAME:
MicroStation v8.11.7.529

COUNTY OF	ITEM NO.	SHEET NO.
CALLOWAY	1-314.10	R37

Control Point #107
E 887751.5546
N 1743280.6548
El. 507.37

Remove 180 S.Y. Exist. Pavement
Grade to Drain

LT. 11+39 CONST. 15' ENTRANCE
W/ 74 S.Y. OF DENSE GRADED AGGREGATE
54 S.Y. OF CLASS 2 ASPHALT BASE.
52 S.Y. OF CLASS 2 ASPHALT SURFACE, AND
12 S.Y. OF CEM. CONC. ENT. PAVEMENT 8-INCH

JAMES A. & DOROTHY B. SIMS, TRUSTEES SIMS LIVING TRUST (10)

25' Curb & Gutter Trans.

FILL AND CAP EXIST INLET

12" RCP (SAFELOAD)

FILL & CAP EXIST INLET.

25' Curb & Gutter Trans.

C.P. #107

RIVERWOOD ROAD

POE 14+02.45

Exist. R/W

Asphalt Surf.

Prop. R/W

Temp. Esm't.

Perm. Esm't.

Exist. R/W

Asphalt Surf.

APPROX. LOCATION

Brick Column

Vacant Lot

℄ U.S. 641 WIDENING

N1°01'51"W

N85°53'32"E

Prop. R/W

Perm. Esm't. 86.22

N85°53'32"E 86.22

Temp. Esm't.

Plug Existing Pipe

N85°53'32"E 150.50

SCOTT W. EDGAR
ELAINE (WF.) (6*)

128+28.24 U.S. 641 =
10+00 RIVERWOOD ROAD

TOM WAGNER
L. DIANE (WF.) (7)

RT. 11+38 CONST. 12' ENTRANCE
W/ 57 S.Y. OF DENSE GRADED AGGREGATE
40 S.Y. OF CLASS 2 ASPHALT BASE.
38 S.Y. OF CLASS 2 ASPHALT SURFACE, AND
11 S.Y. OF CEM. CONC. ENT. PAVEMENT 8-INCH

END CONST. @ 12+50

RT. 12+08 CONST. 12' ENTRANCE
W/ 57 S.Y. OF DENSE GRADED AGGREGATE
41 S.Y. OF CLASS 2 ASPHALT BASE.
39 S.Y. OF CLASS 2 ASPHALT SURFACE, AND
11 S.Y. OF CEM. CONC. ENT. PAVEMENT 8-INCH

MARK CULLEN VINSON (8)

* PARCEL 6 NOTE

R/W & EASEMENTS FOR PARCEL 6 WERE CONVEYED TO THE COMMONWEALTH OF KENTUCKY BY SCOTT W. & ELANE EDGAR AS RECORDED IN DEED BOOK 766 PAGE 153 ON AUG. 29, 2008. THE REMAINDER OF PARCEL 6 WAS SUBSEQUENTLY CONVEYED TO TOM & DIANE WAGNER AS RECORDED IN DEED BOOK 820 PAGE 623 ON NOV. 18, 2009.

RIVERWOOD ROAD
SCALE: 1"= 20'

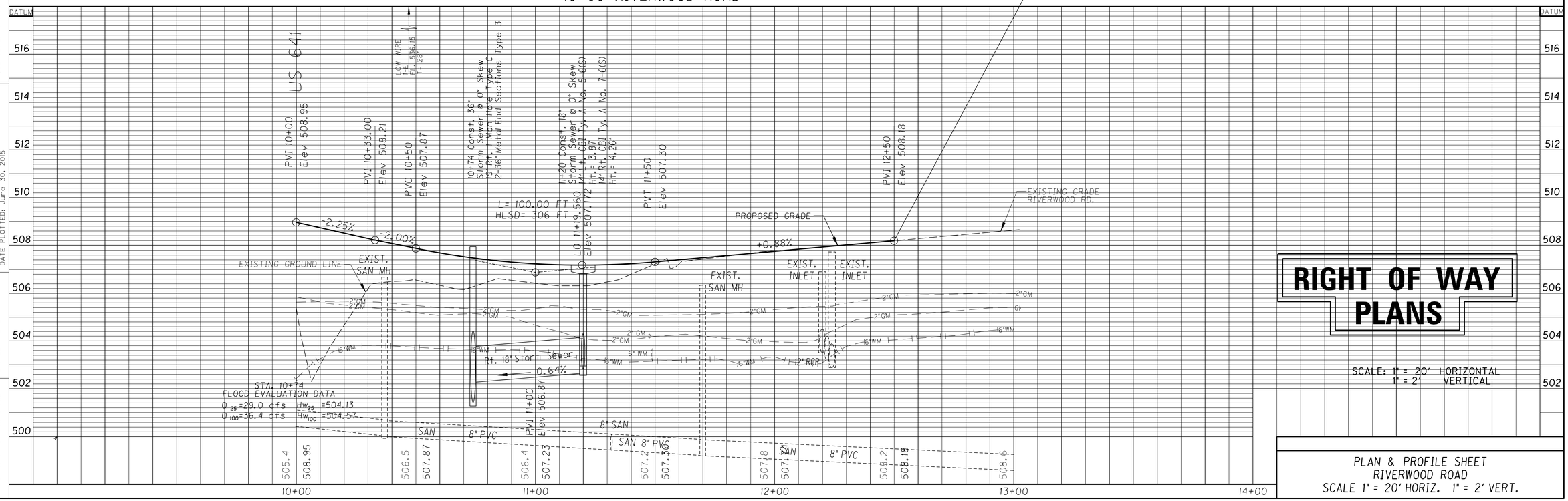

RIGHT OF WAY PLANS

SCALE: 1" = 20' HORIZONTAL
1" = 2' VERTICAL

PLAN & PROFILE SHEET
RIVERWOOD ROAD
SCALE 1" = 20' HORIZ. 1" = 2' VERT.

FILE NAME: H:\01037 US641 CALLOWAY\11-09_LEXINGTON\01037\ROW PLANS 9-7-07\R37 RIVERWOOD.DGN
USER: wiwright
DATE PLOTTED: June 30, 2015
E-SHEET NAME:
MicroStation v8.11.7.529

COUNTY OF	ITEM NO.	SHEET NO.
CALLOWAY	1-314.10	R38

REVISED PLANS DATE: APRIL 17, 2018

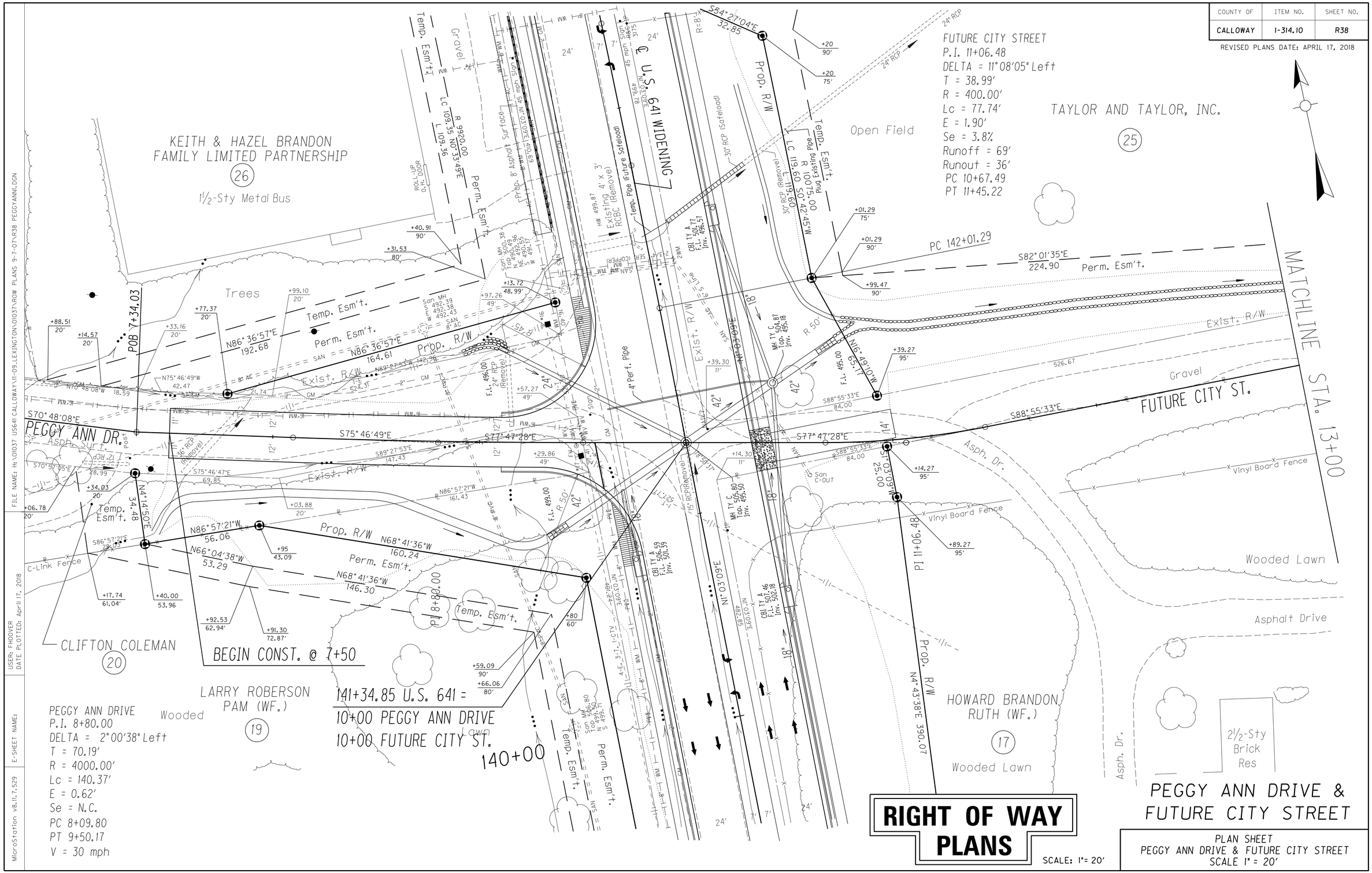

FILE NAME: H:\01037 US641 CALLOWAY\H-09_LEXINGTON\01037\ROW PLANS 9-7-07\R38 PEGGYANNI.DGN

USER: FHOOVER
DATE PLOTTED: April 17, 2018

E-SHEET NAME:

MicroStation v8.11.7.529

COUNTY OF	ITEM NO.	SHEET NO.
CALLOWAY	I-314.10	R39

REVISED PLANS DATE: APRIL 17, 2018

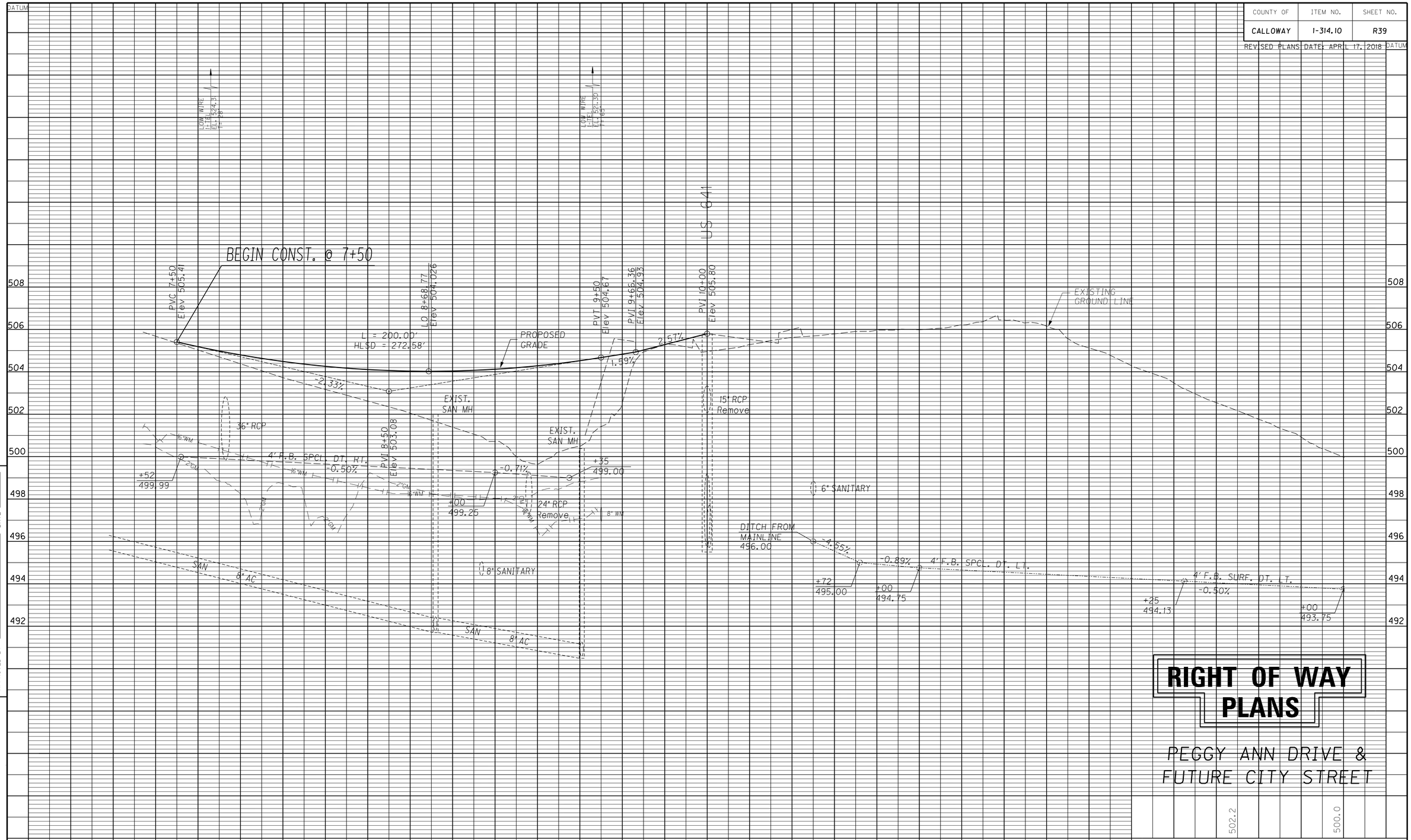

RIGHT OF WAY PLANS

PEGGY ANN DRIVE & FUTURE CITY STREET

PROFILE SHEET
PEGGY ANN DRIVE & FUTURE CITY STREET
SCALE 1" = 20' HORIZ. 1" = 2' VERT.

PREPARED BY _____ DATE _____
CHECKED BY _____ DATE _____
APPROVED BY _____

Cell Library: kytc.cel
Cell Name: spf
DD-MMM-YYYY HH:MM

COUNTY OF	ITEM NO.	SHEET NO.
CALLOWAY	1-314.10	R40

REVISED PLANS DATE: APRIL 17, 2018

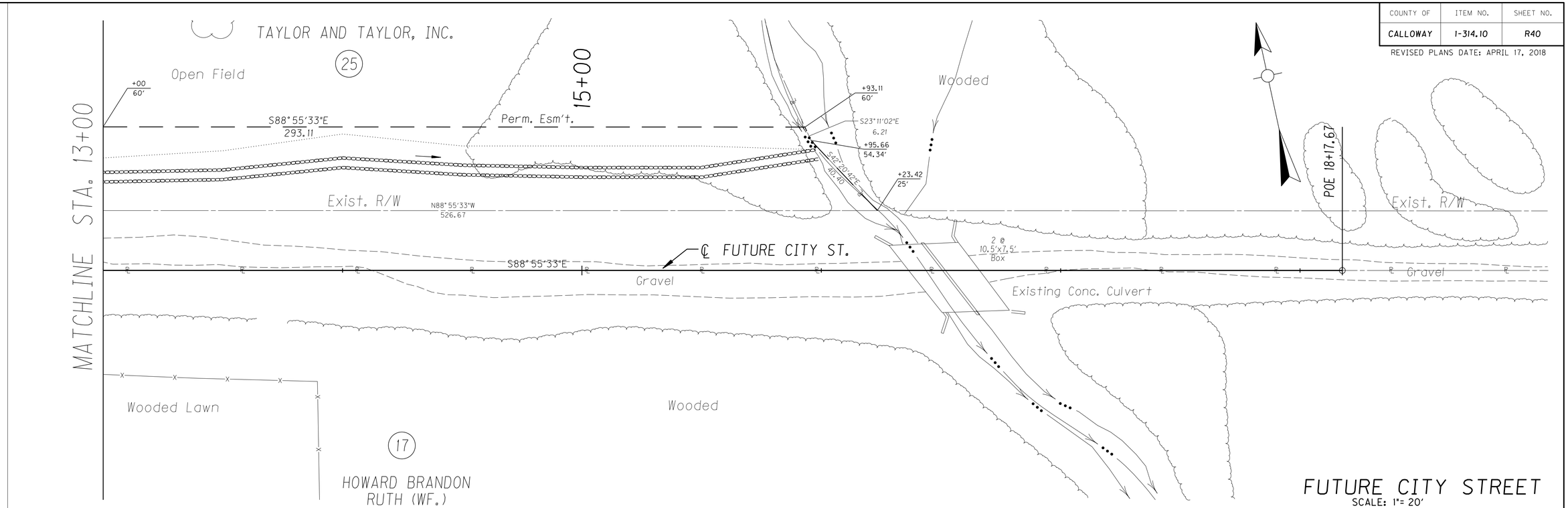

FUTURE CITY STREET
SCALE: 1"= 20'

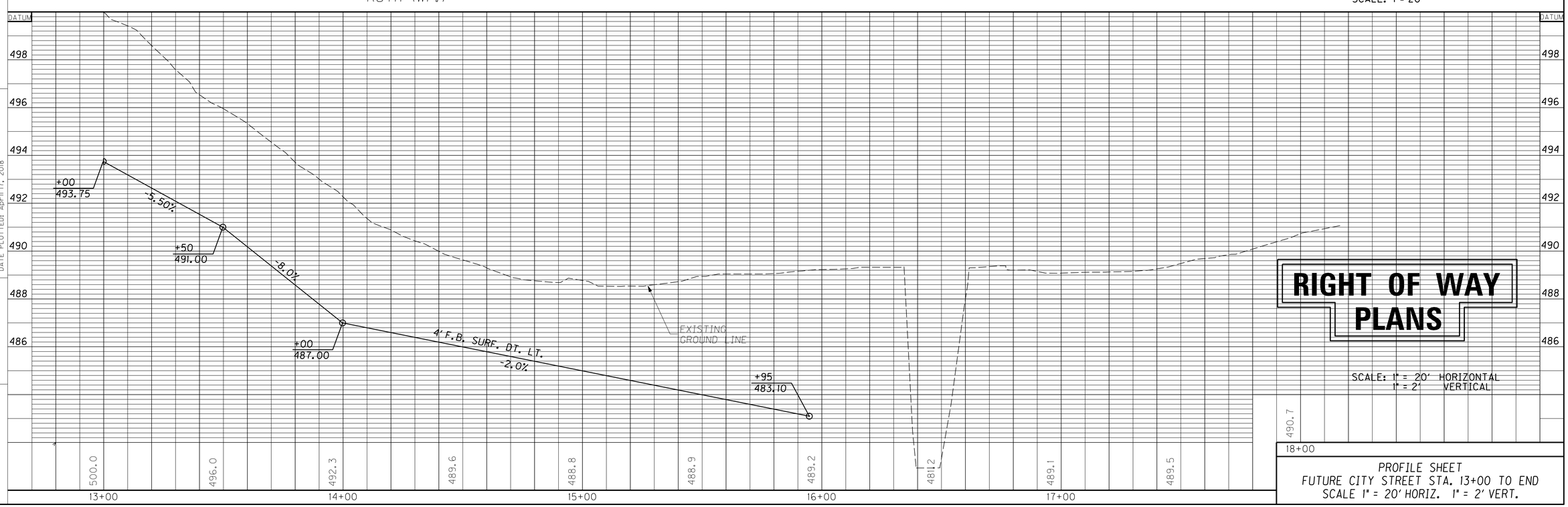

RIGHT OF WAY PLANS

SCALE: 1" = 20' HORIZONTAL
1" = 2' VERTICAL

PROFILE SHEET
FUTURE CITY STREET STA. 13+00 TO END
SCALE 1" = 20' HORIZ. 1" = 2' VERT.

FILE NAME: H:\01037 US641 CALLOWAY\11-09_LEXINGTON\01037\ROW PLANS 9-7-07\R40 PEGGYANN2.DGN
USER: FHOOVER
DATE PLOTTED: April 17, 2018
E-SHEET NAME:
MicroStation v8.11.7.529

COUNTY OF	ITEM NO.	SHEET NO.
CALLOWAY	1-314.10	R41

REVISED PLAN DATE: OCTOBER 12, 2015

PRIMARY HOLDINGS, LLC. (34)

156+31.11 U.S. 641 = 10+00 GLENDALE ROAD WEST

156+23.23 U.S. 641 = 10+00 GLENDALE ROAD EAST

POB 7+01.30

GLENDALE RD. WEST

GLENDALE RD. EAST

To Ky 121

S85°54'06"E

S88°08'33"E

PI 156+24.20
Delta = 0°36'35"

GPS Mon #01 12 01

Perm. Esm't. 205.35

N85°54'06"W 188.01

Temp. Esm't.

N4°05'54"E 5.00

APPROXIMATE LIMITS OF ASPHALT PAVEMENT MILLING AND TEXTURING

Sta. 7+30 Glendale Road.
Const. 20 L.F. of Edge Key.

BEGIN CONST. @ 7+30

RT. 7+84 CONST. 24' ENTRANCE
W/ 49 S.Y. OF DENSE GRADED AGGREGATE
48 S.Y. OF CLASS I ASPHALT BASE AND
46 S.Y. OF CLASS I ASPHALT SURFACE
AND 34' OF 15" ENTRANCE PIPE
W/2 15" METAL END SECTIONS TYPE I

RT. 8+69 CONST. 28' ENTRANCE
W/ 65 S.Y. OF DENSE GRADED AGGREGATE
63 S.Y. OF CLASS I ASPHALT BASE AND
61 S.Y. OF CLASS I ASPHALT SURFACE.

PRIMARY HOLDINGS, LLC. (33)

Open Field

Gravel Parking

Asphalt Parking

1-Sty Brick Bus

Lawn

GLENDALE ROAD CHURCH OF CHRIST, INC. (30)

Prop. R/W
Perm. Esm't.
Temp. Esm't.

℄ U.S. 641 WIDENING

N67°35'57"E 77.05

N67°35'57"E 108.11

N0°14'52"E 585.00

N0°14'52"E 46.67

85' Rt 155+47.81
73' Rt 10+87.08

END CONST. @ 11+27.08

GLENDALE ROAD
SCALE: 1"=20'

P.V.I. 7+30.00 Elev 512.30
P.V.I. 7+80.00 Elev 513.10
P.V.C. 7+60.00 Elev 512.78
P.V.T. 8+00.00 Elev 513.21
P.V.I. 9+67.00 Elev 514.07
P.V.I. 10+00.00 Elev 514.68
PVI 10+00.00 Elev 514.40
PVI 10+33.22 Elev 513.93
PVI 11+27.08 Elev 512.72

PROPOSED GRADE
EXISTING GRADE GLENDALE RD. WEST
EXISTING GROUND LINE
EXISTING GRADE GLENDALE RD. EAST

+1.60% +0.52% +1.86% -1.42% -1.29%

15" Ent. Pipe Rt.
L= 40.00 FT
NPSD= 1015 FT

US 641

EXIST. SAN MH
EXIST. INLET
30" CMP
18" CMP

RIGHT OF WAY PLANS

SCALE: 1" = HORIZONTAL
1" = VERTICAL

12+00

PLAN & PROFILE SHEET
GLENDALE ROAD
SCALE 1" = 20' HORIZ. 1" = 2' VERT.

7+00 8+00 9+00 10+00 11+00

FILE NAME: H:\01037 US641 CALLOWAY\11-09_LEXINGTON\01037\ROW PLANS 9-7-07\R41 GLENDALE.DGN
USER: wiwright
DATE PLOTTED: August 18, 2015
E-SHEET NAME:
MicroStation v8.11.7.529

RIGHT OF WAY SUMMARY

COUNTY OF	ITEM NO.	SHEET NO.
CALLOWAY	1-314.10	R42

REVISED PLANS DATE: SEPTEMBER 13, 2018

PARCEL NO.	NAME	TOTAL AREA OF TRACT		PERMANENT R/W ACQUIRED		EASEMENTS			AREA SEVERED				EXCESS PURCHASED		PORTION REMAINING		SEWER SYSTEM TYPE	SEWER SYSTEM AFFECTED BY PROJECT		BUILDINGS ACQUIRED NUMBER				HAZARDOUS WASTE	REMARKS
						PERMANENT	TEMPORARY		LEFT		RIGHT														
		ACRES	SQ. FT.	ACRES	SQ. FT.	SQ. FT.	SQ. FT.		ACRES	SQ. FT.	ACRES	SQ. FT.	ACRES	SQ. FT.	ACRES	SQ. FT.		YES	NO	C	R	F	S		
1	MARTHA HODGE	12.22	-	-	-	833	806	-	-	-	-	-	-	-	12.22	-	3		√						D.B. 466 PG. 509 TAX MAP 43-36C
2	CLARA W. HUMPHREY	13.23	-	0.43	-	9244	6645	-	-	-	-	-	-	-	12.80	-	4		√						W.B. 268 PG. 202 TAX MAP 43-36 Microfilm Book 157 Card 1772
3	THE CLARA WALDROP HUMPHREY REVOCABLE TRUST	12.71	-	0.58	-	9482	6333	-	-	-	-	-	-	-	12.13	-	3		√						D.B. 510 PG. 536 TAX MAP 43-36F
4	HOWARD BRANDON RUTH (WF.)	59.64	-	3.29	-	-	2797	-	-	-	-	-	-	-	56.35	-	4		√						D.B. 264 PG. 813 TAX MAP 43-67
5	NOT USED	-	-	-	-	-	-	-	-	-	-	-	-	-	-	-	-	-	-						NOT USED
6*	SCOTT W. EDGAR ELAINE (WF.)	0.92	-	0.58	-	1293	1662	-	-	-	-	-	-	-	0.34	-	4	√							D.B. 208 PG. 525 TAX MAP 12-6-15
7	TOM WAGNER L. DIANE (WF.)	0.65	-	-	421	1850	1503	-	-	-	-	-	-	-	0.64	-	3	√							D.B. 237 PG. 28 TAX MAP 12-6-13 D.B. 237 PG. 28 TAX MAP 12-6-14
8	MARK CULLEN VINSON	0.65	-	-	-	86	452	-	-	-	-	-	-	-	0.65	-	3	-	√						D.B. 801 PG. 315 TAX MAP 12-6-12
9	NOT USED	-	-	-	-	-	-	-	-	-	-	-	-	-	-	-	-	-	-						NOT USED
10	JAMES A. & DOROTHY B. SIMS, TRUSTEES SIMS LIVING TRUST	2.19 (C)	-	0.11	-	-	1671	-	-	-	-	-	-	-	2.08	-	3	√							D.B. 972 PG. 80 TAX MAP 12-6-1 & 1A
11	CHARLES E. COOK MARTHA C. (WF.)	1.75 (C)	-	0.26	-	3735	2487	-	-	-	-	-	-	-	1.49	-	3	√							D.B. 162 PG. 738 TAX MAP 43-36A D.B. 168 PG. 909 Microfilm Book 162 Card 2009
12	MILTON DALE FRIZZELL DEBORAH LYNNE (WF.)	2.80	-	0.21	-	2985	1992	-	-	-	-	-	-	-	2.59	-	3	√							D.B. 425 PG. 66 TAX MAP 12-4-4A
13	LARRY ROBERSON & PAM (WF.) (1/3) DONALD HUGH ROBERSON (1/3) SUMMER ROBERSON CROSS & ROBERT (HSBD.) (1/3) SUBJECT TO LIFE ESTATE TO JAN ROBERSON	22.89	-	0.53	-	12367	7964	-	-	-	-	-	-	-	22.36	-	3	√							D.B. 164 CARD 1772 TAX MAP 12-4-3 D.B. 175 PG. 96 D.B. 903 PG. 442 D.B. 903 PG. 456 D.B. 1018 PG. 318
14	NOT USED	-	-	-	-	-	-	-	-	-	-	-	-	-	-	-	-	-	-						NOT USED
15	LARRY ROBERSON & PAM (WF.) (1/3) DONALD HUGH ROBERSON (1/3) SUMMER ROBERSON CROSS & ROBERT (HSBD.) (1/3) SUBJECT TO LIFE ESTATE TO JAN ROBERSON	5.09 (C)	-	0.60	-	-	1647	-	-	-	-	-	-	-	4.49	-	4		√						D.B. 164 CARD 1772 TAX MAP 12-5-6 D.B. 175 PG. 96 D.B. 903 PG. 442 D.B. 903 PG. 456 D.B. 1018 PG. 318
16	KEVIN M. ADAMS KIMBERLY E. (WF.)	1.15	-	0.17	-	-	2850	-	-	-	-	-	-	-	0.98	-	3	√							D.B. 241 PG. 701 TAX MAP 12-5-5
17	HOWARD BRANDON RUTH (WF.)	27.07	-	0.78	-	-	1589	-	-	-	-	-	-	-	26.29	-	3	√							COMMISSIONERS DEED 6 PG. 357 TAX MAP 12-5-4
18	NOT USED	-	-	-	-	-	-	-	-	-	-	-	-	-	-	-	-	-	-						NOT USED
19	LARRY ROBERSON PAM (WF.)	13.77	-	0.19	-	11415	5467	-	-	-	-	-	-	-	13.58	-	3	√							D.B. 257 PG. 707 TAX MAP 12-4-1
20	CLIFTON COLEMAN	0.44 (C)	-	0.13	-	-	1078	-	-	-	-	-	-	-	0.31	-	3		√						D.B. 525 PG. 396 TAX MAP 12-2-1A
21	NOT USED	-	-	-	-	-	-	-	-	-	-	-	-	-	-	-	-	-	-						NOT USED
22	NOT USED	-	-	-	-	-	-	-	-	-	-	-	-	-	-	-	-	-	-						NOT USED
23	NOT USED	-	-	-	-	-	-	-	-	-	-	-	-	-	-	-	-	-	-						NOT USED
24	NOT USED	-	-	-	-	-	-	-	-	-	-	-	-	-	-	-	-	-	-						NOT USED
25	TAYLOR AND TAYLOR, INC.	2.57 (C)	-	0.30	-	20957	2414	-	-	-	-	-	-	-	2.27	-	3	√	-						D.B. 158 PG. 1676 TAX MAP 12-5-3 TRACT 2
26	KEITH & HAZEL BRANDON FAMILY LIMITED PARTNERSHIP	3.73	-	0.10	-	24163	8143	-	-	-	-	-	-	-	3.63	-	3	√							D.B. 831 PG. 79 TAX MAP 12-3-4 TAX MAP 12-3-5
27	TAYLOR AND TAYLOR, INC.	3.19 (C)	-	0.21	-	5242	4335	-	-	-	-	-	-	-	2.98	-	3		√						D.B. 158 PG. 1676 TAX MAP 12-5-3 TRACT 1
28	NOT USED	-	-	-	-	-	-	-	-	-	-	-	-	-	-	-	-	-	-						NOT USED
29	TAYLOR AND TAYLOR, INC.	5.05	-	0.25	-	1550	5120	-	-	-	-	-	-	-	4.80	-	3	√							D.B. 381 PG. 628 TAX MAP 12-5-2A
30	GLENDALE ROAD CHURCH OF CHRIST, INC.	20.00	-	0.37	-	3681	8943	-	-	-	-	-	-	-	19.63	-	3		√						Microfilm Book 171 Slide 1690 TAX MAP 12-5-1
31	TAYLOR AND TAYLOR, INC.	3.71 (C)	-	-	2628	7611	3135	-	-	-	-	-	-	-	3.65	-	3	√							D.B. 254 PG. 108 TAX MAP 12-3-3 D.B. 254 PG. 112
32	YOGI KRUDA HOTEL, INC.	5.76 (C)	-	0.12	-	8125	3541	-	-	-	-	-	-	-	5.64	-	3	√							D.B. 1014 PG. 564 TAX MAP 12-3-2
33	PRIMARY HOLDINGS, LLC.	2.65 (C)	-	-	2427	3543	2108	-	-	-	-	-	-	-	2.59	-	4		√						D.B. 1041 PG. 730 TAX MAP 12-3-1, 2A & 2B
34	PRIMARY HOLDINGS, LLC.	3.12	-	-	-	5561	1501	-	-	-	-	-	-	-	3.12	-	3	√							D.B. 1041 PG. 730 TAX MAP 5-10-32

(C) CALCULATED AREA

*PARCEL 6 NOTE

R/W & EASEMENTS FOR PARCEL 6 WERE CONVEYED TO THE COMMONWEALTH OF KENTUCKY BY SCOTT W. & ELANE EDGAR AS RECORDED IN DEED BOOK 766 PAGE 153 ON AUG. 29, 2008. THE REMAINDER OF PARCEL 6 WAS SUBSEQUENTLY CONVEYED TO TOM & DIANE WAGNER AS RECORDED IN DEED BOOK 820 PAGE 623 ON NOV. 18, 2009.

RIGHT OF WAY PLANS

TYPE SEWER SYSTEM
1. PRIVATE - INDIVIDUAL
2. PRIVATE - MULTI PARTY
3. PUBLIC
4. NONE
5. NOT APPLICABLE

BUILDINGS ACQUIRED CODE
C - COMMERICAL
R - RESIDENTIAL
F - FARM
S - STORAGE

HAZARDOUS WASTE
UST - UNDERGROUND STORAGE TANK

RIGHT OF WAY SUMMARY

PREPARED BY ____ DATE ____
CHECKED BY ____ DATE ____
APPROVED BY ____ DATE ____

Cell Library: kytc.cel
Cell Name: SD
DD-MMM-YYYY HH:MM

COUNTY OF	ITEM NO.	SHEET NO.
CALLOWAY	1-314.10	R43

REVISED PLAN DATE: JANUARY 4, 2017

RIGHT OF WAY STRIP MAP

SCALE 1"=100'

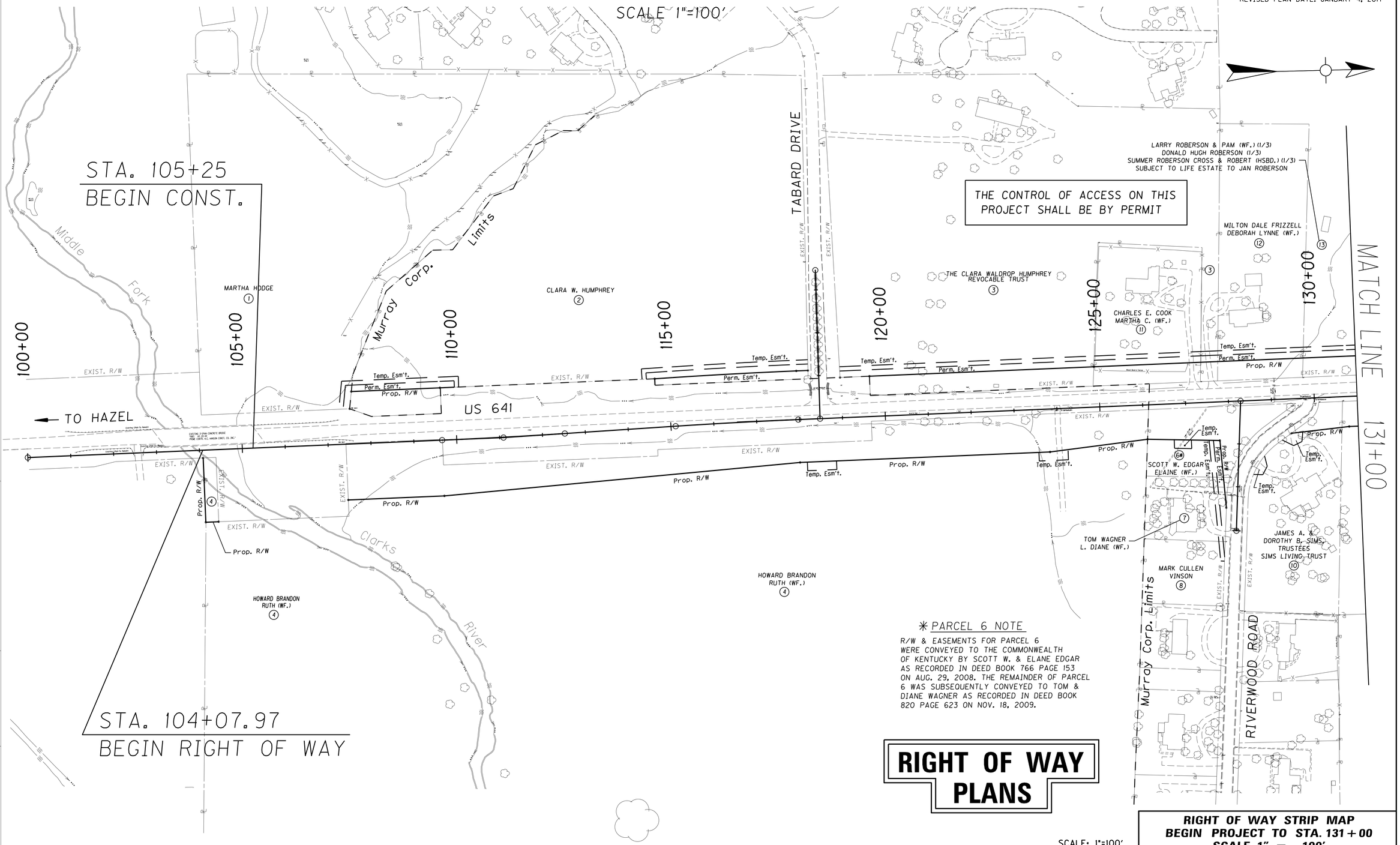

✳ PARCEL 6 NOTE

R/W & EASEMENTS FOR PARCEL 6 WERE CONVEYED TO THE COMMONWEALTH OF KENTUCKY BY SCOTT W. & ELANE EDGAR AS RECORDED IN DEED BOOK 766 PAGE 153 ON AUG. 29, 2008. THE REMAINDER OF PARCEL 6 WAS SUBSEQUENTLY CONVEYED TO TOM & DIANE WAGNER AS RECORDED IN DEED BOOK 820 PAGE 623 ON NOV. 18, 2009.

RIGHT OF WAY PLANS

SCALE: 1"=100'

RIGHT OF WAY STRIP MAP
BEGIN PROJECT TO STA. 131+00
SCALE 1" = 100'

FILE NAME: H:\01037 US641 CALLOWAY\11-09_LEXINGTON\01037\ROW PLANS 9-7-07\R43 STRIPMAP1.DGN
USER: thoover
DATE PLOTTED: January 4, 2017
E-SHEET NAME:
MicroStation v8.11.7.529

COUNTY OF	ITEM NO.	SHEET NO.
CALLOWAY	1-314.10	R44

REVISED PLANS DATE: SEPTEMBER 13, 2018

RIGHT OF WAY STRIP MAP

SCALE 1"=100'

THE CONTROL OF ACCESS ON THIS PROJECT SHALL BE BY PERMIT

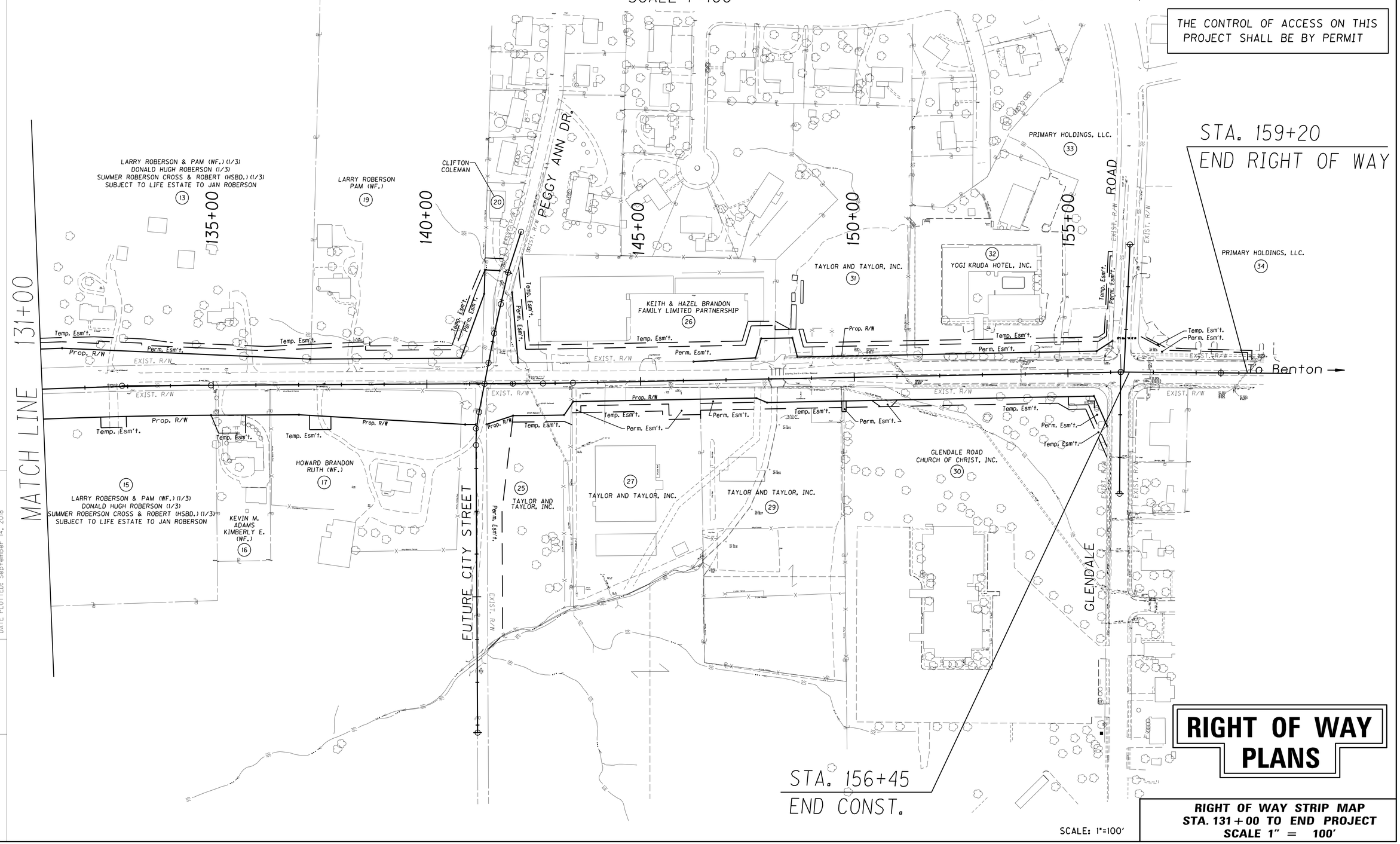

RIGHT OF WAY PLANS

RIGHT OF WAY STRIP MAP
STA. 131+00 TO END PROJECT
SCALE 1" = 100'

SCALE: 1"=100'

FILE NAME: H:\01037 US641 CALLOWAY\11-09_LEXINGTON\01037\ROW PLANS 9-7-07\R44 STRIPMAP2.DGN

USER: WIWRIGHT
DATE PLOTTED: September 14, 2018

E-SHEET NAME:

MicroStation v8.11.9.832

COUNTY OF	ITEM NO.	SHEET NO.
CALLOWAY	1-314.10	R45

REVISED PLANS DATE: APRIL 17, 2018

GEOMETRIC CONTROL POINTS

STATION	DESCRIPTION	COORDINATES	
		EAST	NORTH
U.S. 641			
100+00.00	P.O.T.	887419.9530	1740464.8370
109+65.93	P.C.	887402.5742	1741430.6155
111+09.07	P.I.	887399.9990	1741573.7280
112+52.19	P.T.	887394.0109	1741716.7384
115+10.97	P.C.	887383.1850	1741975.2856
116+54.10	P.I.	887377.1970	1742118.2940
117+97.22	P.T.	887374.6217	1742261.4045
130+78.85	P.C.	887351.5628	1743542.8223
132+86.87	P.I.	887347.8200	1743750.8130
134+94.85	P.T.	887351.6414	1743958.8023
142+01.29	P.C.	887364.6187	1744665.1276
142+71.53	P.I.	887365.9090	1744735.3550
143+41.77	P.T.	887366.2127	1744805.5936
156+24.20	P.I.	887371.7570	1746088.0120
158+57.94	P.O.T.	887379.3330	1746321.6300
TABARD DRIVE			
6+53.87	P.O.T.	887027.5910	1742309.2670
10+00.00	P.O.T.	887373.7102	1742312.0583
RIVERWOOD ROAD			
10+00.00	P.O.T.	887356.0716	1743292.2588
13+02.45	P.O.T.	887658.0480	1743275.4000
PEGGY ANN DRIVE/FUTURE CITY STREET			
6+34.03	P.O.T.	887010.1610	1744692.8130
7+34.03	P.O.T.	887104.6000	1744659.9300
8+09.80	P.C.	887178.0528	1744641.3168
8+80.00	P.I.	887246.0940	1744624.0750
9+50.17	P.T.	887314.6983	1744609.2310
10+67.40	P.C.	887429.2732	1744584.4403
11+06.39	P.I.	887467.3818	1744576.1946
11+45.14	P.T.	887506.3654	1744575.4637
18+17.67	P.O.T.	888178.7783	1744562.8557
GLENDALE ROAD EAST			
10+00.00	P.O.T.	887371.7528	1746087.0399
12+84.52	P.O.T.	887656.1190	1746077.8183
GLENDALE ROAD WEST			
7+01.30	P.O.T.	887074.0409	1746116.2645
10+00.00	P.O.T.	887371.9810	1746094.9166

COORDINATE CONTROL POINTS

CONTROL POINT	DESCRIPTION	STATE PLANE COORDINATES			STATION	OFFSET
		EAST (X)	NORTH (Y)	ELEV. (Z)		
01 12 01	GRW GPS CONTROL MONUMENT	887304.7000	1746118.7600	514.57	156+52.76	LT. 68.02'
01 12 02	GRW GPS CONTROL MONUMENT	887309.5300	1744833.9800	496.35	143+69.91	LT. 56.81'
100	FLORENCE & HUTCHESON I.P. & CAP TRAVERSE POINT	887721.6528	1746046.9701	511.98	155+84.67	RT. 350.07'
101	FLORENCE & HUTCHESON I.P. & CAP TRAVERSE POINT	887402.0460	1745642.0963	498.55	151+78.42	RT. 32.22'
102	FLORENCE & HUTCHESON I.P. & CAP TRAVERSE POINT	887372.1854	1744723.3167	498.50	142+59.57	RT. 6.67'
103	FLORENCE & HUTCHESON CAP & NAIL SPUR TRAVERSE	886885.1060	1744718.7244	518.56	142+48.33	LT. 480.31'
104	FLORENCE & HUTCHESON I.P. & CAP TRAVERSE POINT	887316.1905	1744067.9600	523.20	136+03.34	LT. 37.45'
105	FLORENCE & HUTCHESON I.P. & CAP TRAVERSE POINT	887359.8644	1743467.4681	508.34	130+03.35	RT. 6.95'
106	FLORENCE & HUTCHESON I.P. & CAP TRAVERSE POINT	887321.2917	1743209.6216	510.23	127+46.24	LT. 36.26'
107	FLORENCE & HUTCHESON I.P. & CAP TRAVERSE POINT	887751.5546	1743280.6548	507.37	128+09.52	RT. 395.21'
108	FLORENCE & HUTCHESON I.P. & CAP TRAVERSE POINT	887370.0338	1742323.2284	482.40	118+59.12	LT. 3.48'
109	FLORENCE & HUTCHESON I.P. & CAP TRAVERSE POINT	886970.1452	1742327.4842	487.33	118+70.57	LT. 403.22'
110	FLORENCE & HUTCHESON I.P. & CAP TRAVERSE POINT	887380.0635	1741788.9866	481.46	113+24.96	LT. 10.91'
111	FLORENCE & HUTCHESON NAIL & CAP TRAVERSE POINT	887354.6137	1741185.4122	483.57	107+21.63	LT. 52.36'
112	FLORENCE & HUTCHESON I.P. & CAP TRAVERSE POINT	887409.3881	1740743.3204	485.40	102+78.63	LT. 5.55'
115	FLORENCE & HUTCHESON I.P. & CAP TRAVERSE POINT	887307.9293	1745259.7560	495.26	147+95.68	LT. 60.25'

BENCHMARKS

BM#	DESCRIPTION	STATION	OFFSET	ELEV. (Z)
900	CHISLED SQUARE WITH PAINT ON THE S.W. WING WALL OF THE BRIDGE OVER THE MIDDLE FORK OVERFLOW OF THE CLARKS RIVER.	N.A.	N.A.	483.90
901	RR SPIKE IN COMB. POLE #1K256M AT THE NE CORNER OF GLENDALE AND WHITNELL.	156+77.90	LT. 668.012	506.84

RIGHT OF WAY MONUMENT POINTS

STATION	OFFSET	TYPE	EAST (X)	NORTH (Y)
US 641				
104+07.97	18.00' RIGHT	1	887430.61	1740873.07
104+07.97	168.00' RIGHT	1	887580.59	1740875.77
104+37.97	168.00' RIGHT	1	887580.05	1740905.76
107+41.80	130.00' RIGHT	1	887536.59	1741208.86
107+53.80	82.00' LEFT	1	887324.40	1741217.04
107+59.32	122.00' LEFT	1	887284.31	1741221.84
109+65.93	130.00' RIGHT	1	887532.55	1741432.95
109+66.80	122.00' LEFT	1	887280.58	1741429.28
114+69.60	113.51' LEFT	1	887271.50	1741929.20
115+10.97	113.51' LEFT	1	887269.77	1741970.54
117+97.22	100.00' RIGHT	1	887474.61	1742263.20
117+97.22	113.51' LEFT	1	887261.13	1742259.36
118+24.34	113.51' LEFT	1	887260.64	1742286.48
118+98.32	94.00' LEFT	1	887278.82	1742360.79
119+66.93	94.00' LEFT	1	887277.58	1742429.39
123+80	100.00' RIGHT	1A	887464.12	1742845.89
124+89.95	94.00' LEFT	1	887268.17	1742952.33
126+08.11	80.00' RIGHT	1	887440.02	1743073.60
127+76.42	90.00' RIGHT	1	887446.99	1743242.07
129+43.53	80.00' RIGHT	1A	887433.98	1743408.97
130+78.85	94.00' LEFT	1	887257.58	1743541.13
130+78.85	70.00' RIGHT	1	887421.55	1743544.09
131+50	94.00' LEFT	1	887256.51	1743612.86
134+94.85	70.00' RIGHT	1	887421.63	1743957.52
137+00	70.00' RIGHT	1	887425.40	1744162.63
137+28.96	60.00' LEFT	1	887295.95	1744193.98
140+80	60.00' LEFT	1	887302.40	1744544.96
140+89.27	95.00' RIGHT	1	887457.54	1744551.37

RIGHT OF WAY MONUMENT POINTS

STATION	OFFSET	TYPE	EAST (X)	NORTH (Y)
US 641				
141+14.27	95.00' RIGHT	1	887458.00	1744576.37
141+39.27	95.00' RIGHT	1	887458.46	1744601.37
142+01.29	75.00' RIGHT	1	887439.61	1744663.75
142+13.72	48.99' LEFT	1	887315.85	1744678.39
143+20	75.00' RIGHT	1	887441.09	1744783.34
143+41.77	44.00' RIGHT	1	887410.21	1744805.41
146+25	44.04' LEFT	1A	887323.40	1745089.01
147+70	44.00' RIGHT	1A	887412.06	1745233.63
147+70	50.00' LEFT	1A	887318.07	1745234.04
147+84	95.00' LEFT	1	887273.13	1745248.23
147+95	55.00' RIGHT	1A	887423.17	1745258.58
148+57	95.00' LEFT	1A	887273.44	1745321.23
148+68	50.00' LEFT	1	887318.49	1745332.04
155+60	55.00' RIGHT	1	887426.48	1746023.58
155+68	50.00' LEFT	1	887321.51	1746032.03
RIVERWOOD ROAD				
12+49.63	25.05' RIGHT	1	887603.92	1743253.34
PEGGY ANN DRIVE				
7+34.03	20.00' RIGHT	1	887099.69	1744640.54
7+40	53.96' RIGHT	1	887097.13	1744606.16
7+77.37	20.00' LEFT	1	887151.53	1744668.67
7+95	43.09' RIGHT	1	887153.11	1744603.18
GLENDALE ROAD EAST/WEST				
9+28.21	30.00' RIGHT	1	887298.23	1746070.12
11+27	30.00' RIGHT	1	887497.72	1746052.94

RIGHT OF WAY PLANS

REFERENCE SHEET

PREPARED BY _____ DATE _____
CHECKED BY _____ DATE _____
APPROVED BY _____ DATE _____

Cell Library: kytc.cel
Cell Name: SD
DD-MMM-YYYY HH:MM

COUNTY OF	ITEM NO.	SHEET NO.
CALLOWAY	1-314.10	R46

RIGHT OF WAY PLANS

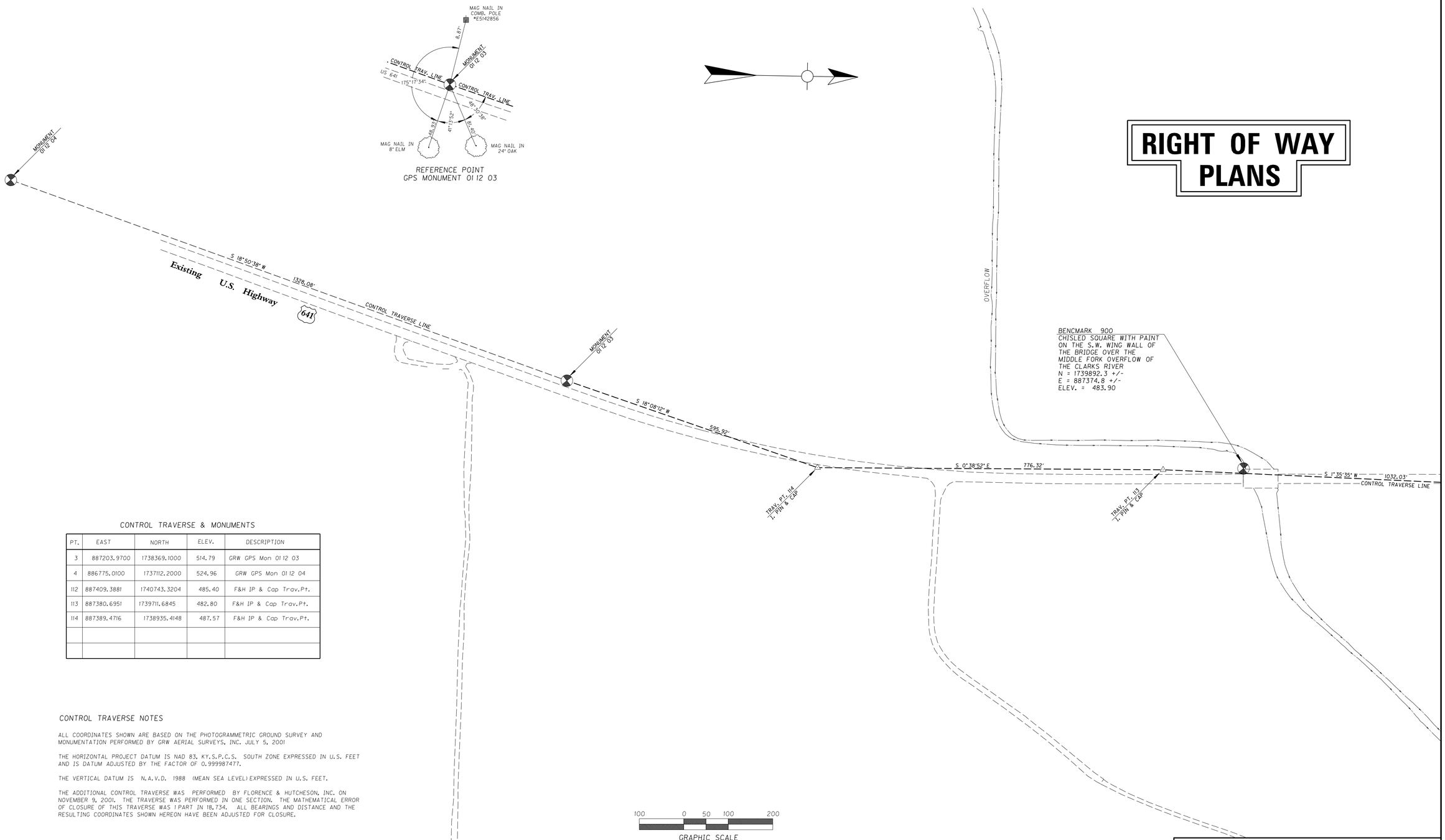

CONTROL TRAVERSE & MONUMENTS

PT.	EAST	NORTH	ELEV.	DESCRIPTION
3	887203.9700	1738369.1000	514.79	GRW GPS Mon 01 12 03
4	886775.0100	1737112.2000	524.96	GRW GPS Mon 01 12 04
112	887409.3881	1740743.3204	485.40	F&H IP & Cap Trav.Pt.
113	887380.6951	1739711.6845	482.80	F&H IP & Cap Trav.Pt.
114	887389.4716	1738935.4148	487.57	F&H IP & Cap Trav.Pt.

CONTROL TRAVERSE NOTES

ALL COORDINATES SHOWN ARE BASED ON THE PHOTOGRAMMETRIC GROUND SURVEY AND MONUMENTATION PERFORMED BY GRW AERIAL SURVEYS, INC. JULY 5, 2001

THE HORIZONTAL PROJECT DATUM IS NAD 83, KY.S.P.C.S. SOUTH ZONE EXPRESSED IN U.S. FEET AND IS DATUM ADJUSTED BY THE FACTOR OF 0.999987477.

THE VERTICAL DATUM IS N.A.V.D. 1988 (MEAN SEA LEVEL) EXPRESSED IN U.S. FEET.

THE ADDITIONAL CONTROL TRAVERSE WAS PERFORMED BY FLORENCE & HUTCHESON, INC. ON NOVEMBER 9, 2001. THE TRAVERSE WAS PERFORMED IN ONE SECTION. THE MATHEMATICAL ERROR OF CLOSURE OF THIS TRAVERSE WAS 1 PART IN 18,734. ALL BEARINGS AND DISTANCE AND THE RESULTING COORDINATES SHOWN HEREON HAVE BEEN ADJUSTED FOR CLOSURE.

PREPARED BY _____ DATE _____
CHECKED BY _____ DATE _____
APPROVED BY _____ DATE _____

Cell Library: kytc.cel
Cell Name: SD
DD-MMM-YYYY HH:MM

Geometry & Traverse Layout
South of Project Beginning
Scale: 1" = 100'

COUNTY OF	ITEM NO.	SHEET NO.
CALLOWAY	1-314.10	R47

RIGHT OF WAY PLANS

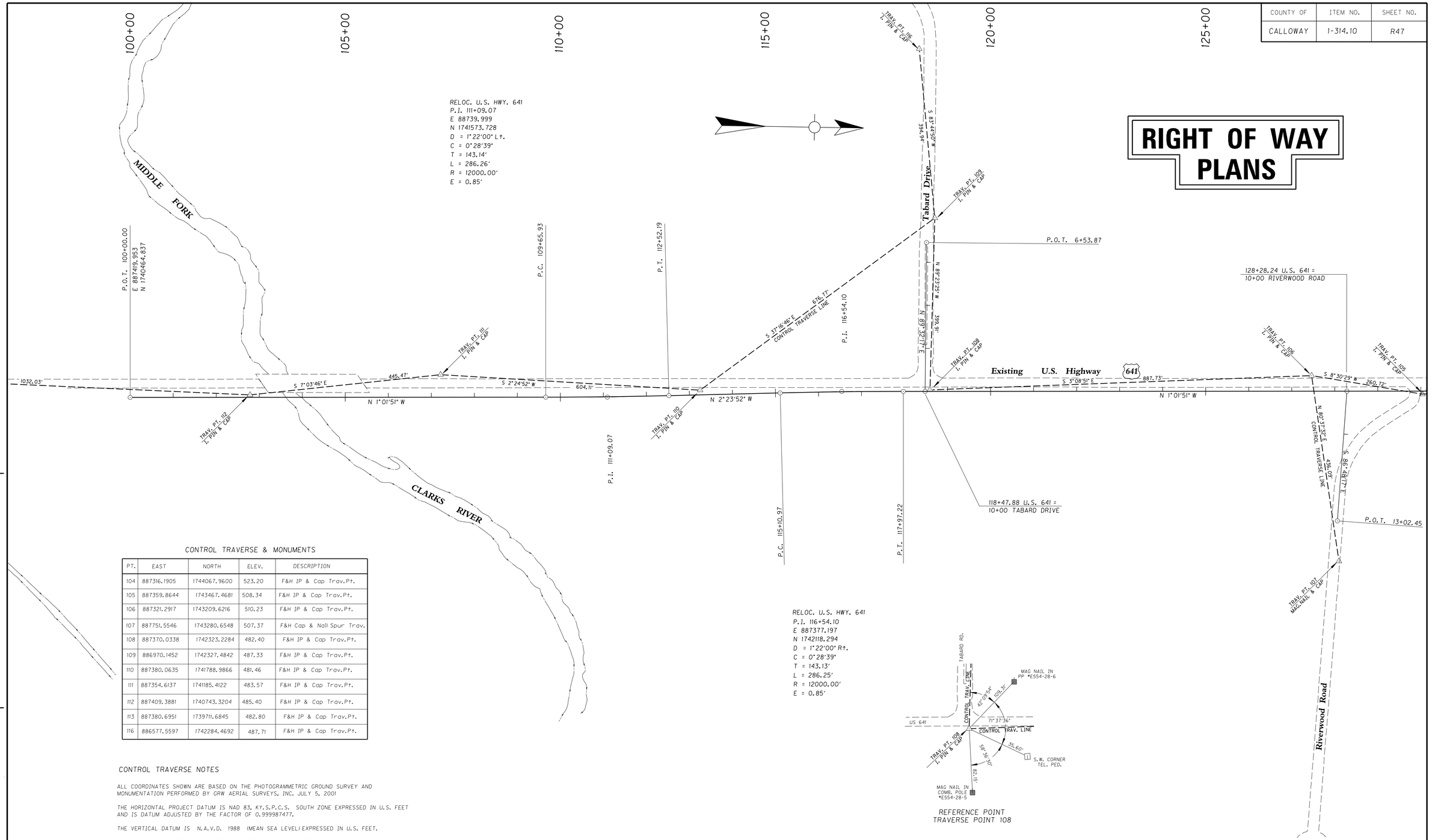

CONTROL TRAVERSE & MONUMENTS

PT.	EAST	NORTH	ELEV.	DESCRIPTION
104	887316.1905	1744067.9600	523.20	F&H IP & Cap Trav.Pt.
105	887359.8644	1743467.4681	508.34	F&H IP & Cap Trav.Pt.
106	887321.2917	1743209.6216	510.23	F&H IP & Cap Trav.Pt.
107	887751.5546	1743280.6548	507.37	F&H Cap & Nail Spur Trav.
108	887370.0338	1742323.2284	482.40	F&H IP & Cap Trav.Pt.
109	886970.1452	1742327.4842	487.33	F&H IP & Cap Trav.Pt.
110	887380.0635	1741788.9866	481.46	F&H IP & Cap Trav.Pt.
111	887354.6137	1741185.4122	483.57	F&H IP & Cap Trav.Pt.
112	887409.3881	1740743.3204	485.40	F&H IP & Cap Trav.Pt.
113	887380.6951	1739711.6845	482.80	F&H IP & Cap Trav.Pt.
116	886577.5597	1742284.4692	487.71	F&H IP & Cap Trav.Pt.

CONTROL TRAVERSE NOTES

ALL COORDINATES SHOWN ARE BASED ON THE PHOTOGRAMMETRIC GROUND SURVEY AND MONUMENTATION PERFORMED BY GRW AERIAL SURVEYS, INC. JULY 5, 2001

THE HORIZONTAL PROJECT DATUM IS NAD 83, KY.S.P.C.S. SOUTH ZONE EXPRESSED IN U.S. FEET AND IS DATUM ADJUSTED BY THE FACTOR OF 0.999987477.

THE VERTICAL DATUM IS N.A.V.D. 1988 (MEAN SEA LEVEL) EXPRESSED IN U.S. FEET.

THE ADDITIONAL CONTROL TRAVERSE WAS PERFORMED BY FLORENCE & HUTCHESON, INC. ON NOVEMBER 9, 2001. THE TRAVERSE WAS PERFORMED IN ONE SECTION. THE MATHEMATICAL ERROR OF CLOSURE OF THIS TRAVERSE WAS 1 PART IN 18,734. ALL BEARINGS AND DISTANCE AND THE RESULTING COORDINATES SHOWN HEREON HAVE BEEN ADJUSTED FOR CLOSURE.

PREPARED BY _____ DATE _____
CHECKED BY _____ DATE _____
APPROVED BY _____ DATE _____

Cell Library: kytc.cel
Cell Name: SP
DD-MMM-YYYY HH:MM

Geometry & Traverse Layout
Sta. 100+00 TO Sta. 130+00
Scale: 1" = 100'

COUNTY OF	ITEM NO.	SHEET NO.
CALLOWAY	1-314.10	R48

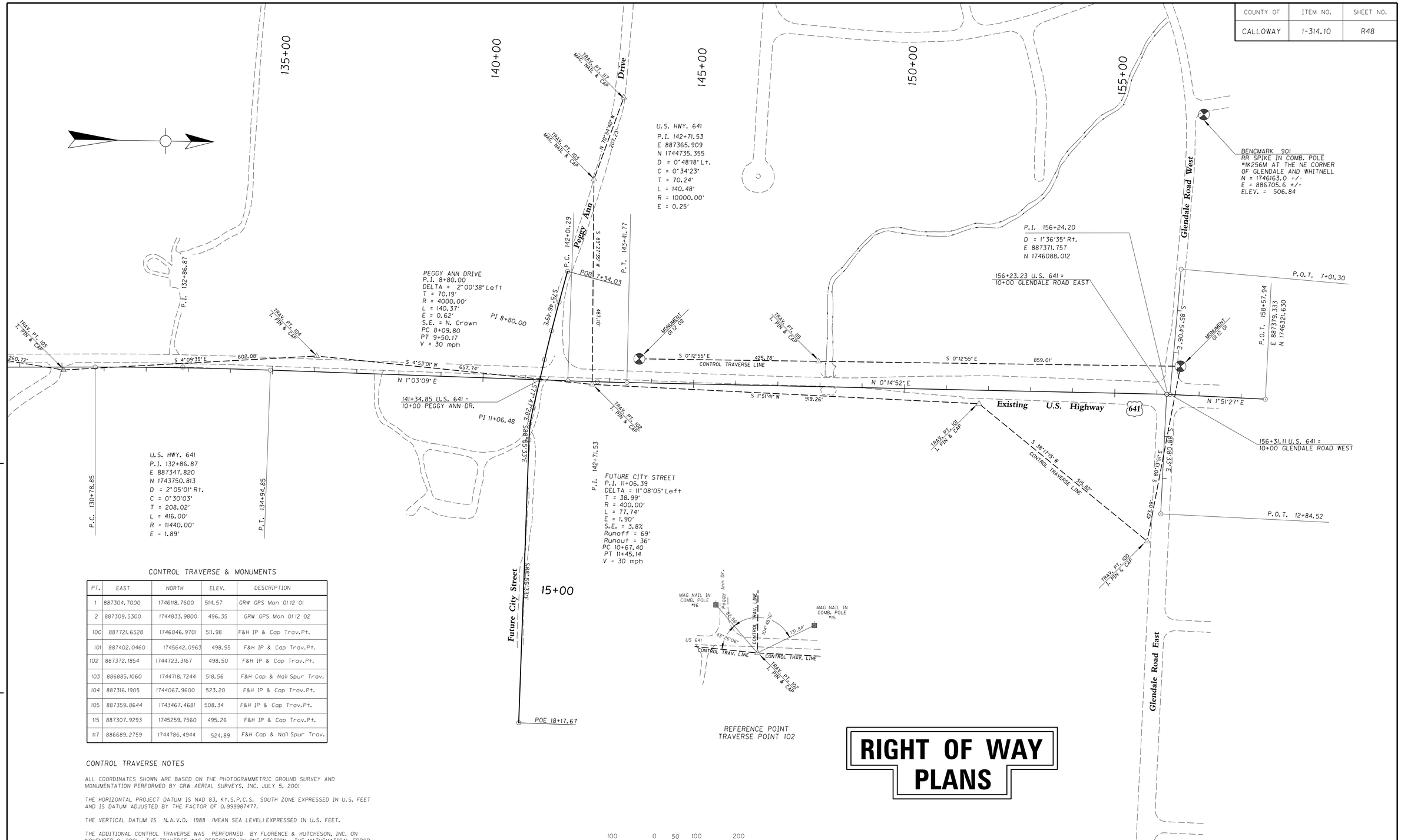

RIGHT OF WAY PLANS

CONTROL TRAVERSE & MONUMENTS

PT.	EAST	NORTH	ELEV.	DESCRIPTION
1	887304.7000	1746118.7600	514.57	GRW GPS Mon 01 12 01
2	887309.5300	1744833.9800	496.35	GRW GPS Mon 01 12 02
100	887721.6528	1746046.9701	511.98	F&H IP & Cap Trav.Pt.
101	887402.0460	1745642.0963	498.55	F&H IP & Cap Trav.Pt.
102	887372.1854	1744723.3167	498.50	F&H IP & Cap Trav.Pt.
103	886885.1060	1744718.7244	518.56	F&H Cap & Nail Spur Trav.
104	887316.1905	1744067.9600	523.20	F&H IP & Cap Trav.Pt.
105	887359.8644	1743467.4681	508.34	F&H IP & Cap Trav.Pt.
115	887307.9293	1745259.7560	495.26	F&H IP & Cap Trav.Pt.
117	886689.2759	1744786.4944	524.89	F&H Cap & Nail Spur Trav.

CONTROL TRAVERSE NOTES

ALL COORDINATES SHOWN ARE BASED ON THE PHOTOGRAMMETRIC GROUND SURVEY AND MONUMENTATION PERFORMED BY GRW AERIAL SURVEYS, INC. JULY 5, 2001

THE HORIZONTAL PROJECT DATUM IS NAD 83, KY.S.P.C.S. SOUTH ZONE EXPRESSED IN U.S. FEET AND IS DATUM ADJUSTED BY THE FACTOR OF 0.999987477.

THE VERTICAL DATUM IS N.A.V.D. 1988 (MEAN SEA LEVEL) EXPRESSED IN U.S. FEET.

THE ADDITIONAL CONTROL TRAVERSE WAS PERFORMED BY FLORENCE & HUTCHESON, INC. ON NOVEMBER 9, 2001. THE TRAVERSE WAS PERFORMED IN ONE SECTION. THE MATHEMATICAL ERROR OF CLOSURE OF THIS TRAVERSE WAS 1 PART IN 18,734. ALL BEARINGS AND DISTANCE AND THE RESULTING COORDINATES SHOWN HEREON HAVE BEEN ADJUSTED FOR CLOSURE.

PREPARED BY _____ DATE _____
CHECKED BY _____ DATE _____
APPROVED BY _____ DATE _____

Cell Library: kytc.cel
Cell Name: 30 DD-MMM-YYYY HH:MM

Geometry & Traverse Layout
Sta. 130+00 to End Project
Scale: 1" = 100'